Operator's Manual

CWT™ WDL-3

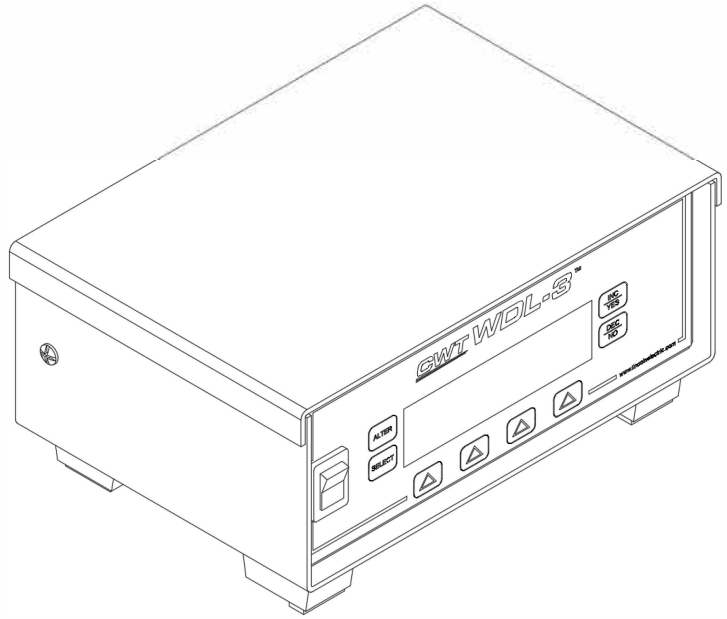

For use with machines having Numbers:

A0A0171-ETH,
A0A0171-USB

Register your machine:
www.lincolnelectric.com/register

Authorized Service and Distributor Locator:
www.lincolnelectric.com/locator

Save for future reference

Date Purchased

Code: (ex: 10859)

Serial: (ex: U1060512345)

A8M5031-B | Issue Date Jan-25

© Lincoln Global, Inc. All Rights Reserved.

THE LINCOLN ELECTRIC COMPANY
22801 St. Clair Avenue • Cleveland, OH • 44117-1199 • U.S.A.
Phone: +1.216.481.8100 • www.lincolnelectric.com

THANK YOU FOR SELECTING A QUALITY PRODUCT BY LINCOLN ELECTRIC.

PLEASE EXAMINE CARTON AND EQUIPMENT FOR DAMAGE IMMEDIATELY

When this equipment is shipped, title passes to the purchaser upon receipt by the carrier. Consequently, claims for material damaged in shipment must be made by the purchaser against the transportation company at the time the shipment is received.

SAFETY DEPENDS ON YOU

Lincoln arc welding and cutting equipment is designed and built with safety in mind. However, your overall safety can be increased by proper installation ... and thoughtful operation on your part. **DO NOT INSTALL, OPERATE OR REPAIR THIS EQUIPMENT WITHOUT READING THIS MANUAL AND THE SAFETY PRECAUTIONS CONTAINED THROUGHOUT.** And, most importantly, think before you act and be careful.

⚠ WARNING

This statement appears where the information must be followed exactly to avoid serious personal injury or loss of life.

⚠ CAUTION

This statement appears where the information must be followed to avoid minor personal injury or damage to this equipment.

KEEP YOUR HEAD OUT OF THE FUMES.

DON'T get too close to the arc. Use corrective lenses if necessary to stay a reasonable distance away from the arc.

READ and obey the Safety Data Sheet (SDS) and the warning label that appears on all containers of welding materials.

USE ENOUGH VENTILATION or exhaust at the arc, or both, to keep the fumes and gases from your breathing zone and the general area.

IN A LARGE ROOM OR OUTDOORS, natural ventilation may be adequate if you keep your head out of the fumes (See below).

USE NATURAL DRAFTS or fans to keep the fumes away from your face.

If you develop unusual symptoms, see your supervisor. Perhaps the welding atmosphere and ventilation system should be checked.

WEAR CORRECT EYE, EAR & BODY PROTECTION

PROTECT your eyes and face with welding helmet properly fitted and with proper grade of filter plate (See ANSI Z49.1).

PROTECT your body from welding spatter and arc flash with protective clothing including woolen clothing, flame-proof apron and gloves, leather leggings, and high boots.

PROTECT others from splatter, flash, and glare with protective screens or barriers.

IN SOME AREAS, protection from noise may be appropriate.

BE SURE protective equipment is in good condition.

Also, wear safety glasses in work area **AT ALL TIMES.**

SPECIAL SITUATIONS

DO NOT WELD OR CUT containers or materials which previously had been in contact with hazardous substances unless they are properly cleaned. This is extremely dangerous.

DO NOT WELD OR CUT painted or plated parts unless special precautions with ventilation have been taken. They can release highly toxic fumes or gases.

Additional precautionary measures

PROTECT compressed gas cylinders from excessive heat, mechanical shocks, and arcs; fasten cylinders so they cannot fall.

BE SURE cylinders are never grounded or part of an electrical circuit.

REMOVE all potential fire hazards from welding area.

ALWAYS HAVE FIRE FIGHTING EQUIPMENT READY FOR IMMEDIATE USE AND KNOW HOW TO USE IT.

SECTION A: WARNINGS

CALIFORNIA PROPOSITION 65 WARNINGS

WARNING: Breathing diesel engine exhaust exposes you to chemicals known to the State of California to cause cancer and birth defects, or other reproductive harm.

- Always start and operate the engine in a well-ventilated area.
- If in an exposed area, vent the exhaust to the outside.
- Do not modify or tamper with the exhaust system.
- Do not idle the engine except as necessary.

For more information go to www.P65 warnings.ca.gov/diesel

WARNING: This product, when used for welding or cutting, produces fumes or gases which contain chemicals known to the State of California to cause birth defects and, in some cases, cancer. (California Health & Safety Code § 25249.5 *et seq.)*

WARNING: Cancer and Reproductive Harm www.P65warnings.ca.gov

ARC WELDING CAN BE HAZARDOUS. PROTECT YOURSELF AND OTHERS FROM POSSIBLE SERIOUS INJURY OR DEATH. KEEP CHILDREN AWAY. PACEMAKER WEARERS SHOULD CONSULT WITH THEIR DOCTOR BEFORE OPERATING.

Read and understand the following safety highlights. For additional safety information, it is strongly recommended that you purchase a copy of "Safety in Welding & Cutting - ANSI Standard Z49.1" from the American Welding Society, P.O. Box 351040, Miami, Florida 33135 or CSA Standard W117.2-1974. A Free copy of "Arc Welding Safety" booklet E205 is available from the Lincoln Electric Company, 22801 St. Clair Avenue, Cleveland, Ohio 44117-1199.

BE SURE THAT ALL INSTALLATION, OPERATION, MAINTENANCE AND REPAIR PROCEDURES ARE PERFORMED ONLY BY QUALIFIED INDIVIDUALS.

FOR ENGINE POWERED EQUIPMENT.

1.a. Turn the engine off before troubleshooting and maintenance work unless the maintenance work requires it to be running.

1.b. Operate engines in open, well-ventilated areas or vent the engine exhaust fumes outdoors.

1.c. Do not add the fuel near an open flame welding arc or when the engine is running. Stop the engine and allow it to cool before refueling to prevent spilled fuel from vaporizing on contact with hot engine parts and igniting. Do not spill fuel when filling tank. If fuel is spilled, wipe it up and do not start engine until fumes have been eliminated.

1.d. Keep all equipment safety guards, covers and devices in position and in good repair. Keep hands, hair, clothing and tools away from V-belts, gears, fans and all other moving parts when starting, operating or repairing equipment.

1.e. In some cases it may be necessary to remove safety guards to perform required maintenance. Remove guards only when necessary and replace them when the maintenance requiring their removal is complete. Always use the greatest care when working near moving parts.

1.f. Do not put your hands near the engine fan. Do not attempt to override the governor or idler by pushing on the throttle control rods while the engine is running.

1.g. To prevent accidentally starting gasoline engines while turning the engine or welding generator during maintenance work, disconnect the spark plug wires, distributor cap or magneto wire as appropriate.

1.h. To avoid scalding, do not remove the radiator pressure cap when the engine is hot.

ELECTRIC AND MAGNETIC FIELDS MAY BE DANGEROUS

2.a. Electric current flowing through any conductor causes localized Electric and Magnetic Fields (EMF). Welding current creates EMF fields around welding cables and welding machines

2.b. EMF fields may interfere with some pacemakers, and welders having a pacemaker should consult their physician before welding.

2.c. Exposure to EMF fields in welding may have other health effects which are now not known.

2.d. All welders should use the following procedures in order to minimize exposure to EMF fields from the welding circuit:

2.d.1. Route the electrode and work cables together - Secure them with tape when possible.

2.d.2. Never coil the electrode lead around your body.

2.d.3. Do not place your body between the electrode and work cables. If the electrode cable is on your right side, the work cable should also be on your right side.

2.d.4. Connect the work cable to the workpiece as close as possible to the area being welded.

2.d.5. Do not work next to welding power source.

ELECTRIC SHOCK CAN KILL.

3.a. The electrode and work (or ground) circuits are electrically "hot" when the welder is on. Do not touch these "hot" parts with your bare skin or wet clothing. Wear dry, hole-free gloves to insulate hands.

3.b. Insulate yourself from work and ground using dry insulation. Make certain the insulation is large enough to cover your full area of physical contact with work and ground.

In addition to the normal safety precautions, if welding must be performed under electrically hazardous conditions (in damp locations or while wearing wet clothing; on metal structures such as floors, gratings or scaffolds; when in cramped positions such as sitting, kneeling or lying, if there is a high risk of unavoidable or accidental contact with the workpiece or ground) use the following equipment:

- Semiautomatic DC Constant Voltage (Wire) Welder.
- DC Manual (Stick) Welder.
- AC Welder with Reduced Voltage Control.

3.c. In semiautomatic or automatic wire welding, the electrode, electrode reel, welding head, nozzle or semiautomatic welding gun are also electrically "hot".

3.d. Always be sure the work cable makes a good electrical connection with the metal being welded. The connection should be as close as possible to the area being welded.

3.e. Ground the work or metal to be welded to a good electrical (earth) ground.

3.f. Maintain the electrode holder, work clamp, welding cable and welding machine in good, safe operating condition. Replace damaged insulation.

3.g. Never dip the electrode in water for cooling.

3.h. Never simultaneously touch electrically "hot" parts of electrode holders connected to two welders because voltage between the two can be the total of the open circuit voltage of both welders.

3.i. When working above floor level, use a safety belt to protect yourself from a fall should you get a shock.

3.j. Also see Items 6.c. and 8.

ARC RAYS CAN BURN.

4.a. Use a shield with the proper filter and cover plates to protect your eyes from sparks and the rays of the arc when welding or observing open arc welding. Headshield and filter lens should conform to ANSI Z87. I standards.

4.b. Use suitable clothing made from durable flame-resistant material to protect your skin and that of your helpers from the arc rays.

4.c. Protect other nearby personnel with suitable, non-flammable screening and/or warn them not to watch the arc nor expose themselves to the arc rays or to hot spatter or metal.

FUMES AND GASES CAN BE DANGEROUS.

5.a. Welding may produce fumes and gases hazardous to health. Avoid breathing these fumes and gases. When welding, keep your head out of the fume. Use enough ventilation and/or exhaust at the arc to keep fumes and gases away from the breathing zone. **When welding hardfacing (see instructions on container or SDS) or on lead or cadmium plated steel and other metals or coatings which produce highly toxic fumes, keep exposure as low as possible and within applicable OSHA PEL and ACGIH TLV limits using local exhaust or mechanical ventilation unless exposure assessments indicate otherwise. In confined spaces or in some circumstances, outdoors, a respirator may also be required. Additional precautions are also required when welding on galvanized steel.**

5. b. The operation of welding fume control equipment is affected by various factors including proper use and positioning of the equipment, maintenance of the equipment and the specific welding procedure and application involved. Worker exposure level should be checked upon installation and periodically thereafter to be certain it is within applicable OSHA PEL and ACGIH TLV limits.

5.c. Do not weld in locations near chlorinated hydrocarbon vapors coming from degreasing, cleaning or spraying operations. The heat and rays of the arc can react with solvent vapors to form phosgene, a highly toxic gas, and other irritating products.

5.d. Shielding gases used for arc welding can displace air and cause injury or death. Always use enough ventilation, especially in confined areas, to insure breathing air is safe.

5.e. Read and understand the manufacturer's instructions for this equipment and the consumables to be used, including the Safety Data Sheet (SDS) and follow your employer's safety practices. SDS forms are available from your welding distributor or from the manufacturer.

5.f. Also see item 1.b.

WELDING AND CUTTING SPARKS CAN CAUSE FIRE OR EXPLOSION.

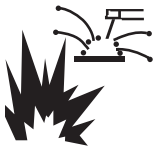

6.a. Remove fire hazards from the welding area. If this is not possible, cover them to prevent the welding sparks from starting a fire. Remember that welding sparks and hot materials from welding can easily go through small cracks and openings to adjacent areas. Avoid welding near hydraulic lines. Have a fire extinguisher readily available.

6.b. Where compressed gases are to be used at the job site, special precautions should be used to prevent hazardous situations. Refer to “Safety in Welding and Cutting” (ANSI Standard Z49.1) and the operating information for the equipment being used.

6.c. When not welding, make certain no part of the electrode circuit is touching the work or ground. Accidental contact can cause overheating and create a fire hazard.

6.d. Do not heat, cut or weld tanks, drums or containers until the proper steps have been taken to insure that such procedures will not cause flammable or toxic vapors from substances inside. They can cause an explosion even though they have been “cleaned”. For information, purchase “Recommended Safe Practices for the Preparation for Welding and Cutting of Containers and Piping That Have Held Hazardous Substances”, AWS F4.1 from the American Welding Society (see address above).

6.e. Vent hollow castings or containers before heating, cutting or welding. They may explode.

6.f. Sparks and spatter are thrown from the welding arc. Wear oil free protective garments such as leather gloves, heavy shirt, cuffless trousers, high shoes and a cap over your hair. Wear ear plugs when welding out of position or in confined places. Always wear safety glasses with side shields when in a welding area.

6.g. Connect the work cable to the work as close to the welding area as practical. Work cables connected to the building framework or other locations away from the welding area increase the possibility of the welding current passing through lifting chains, crane cables or other alternate circuits. This can create fire hazards or overheat lifting chains or cables until they fail.

6.h. Also see item 1.c.

6.I. Read and follow NFPA 51B “Standard for Fire Prevention During Welding, Cutting and Other Hot Work”, available from NFPA, 1 Batterymarch Park, PO box 9101, Quincy, MA 022690-9101.

6.j. Do not use a welding power source for pipe thawing.

CYLINDER MAY EXPLODE IF DAMAGED.

7.a. Use only compressed gas cylinders containing the correct shielding gas for the process used and properly operating regulators designed for the gas and pressure used. All hoses, fittings, etc. should be suitable for the application and maintained in good condition.

7.b. Always keep cylinders in an upright position securely chained to an undercarriage or fixed support.

7.c. Cylinders should be located:

- Away from areas where they may be struck or subjected to physical damage.
- A safe distance from arc welding or cutting operations and any other source of heat, sparks, or flame.

7.d. Never allow the electrode, electrode holder or any other electrically “hot” parts to touch a cylinder.

7.e. Keep your head and face away from the cylinder valve outlet when opening the cylinder valve.

7.f. Valve protection caps should always be in place and hand tight except when the cylinder is in use or connected for use.

7.g. Read and follow the instructions on compressed gas cylinders, associated equipment, and CGA publication P-I, “Precautions for Safe Handling of Compressed Gases in Cylinders,” available from the Compressed Gas Association, 14501 George Carter Way Chantilly, VA 20151.

FOR ELECTRICALLY POWERED EQUIPMENT.

8.a. Turn off input power using the disconnect switch at the fuse box before working on the equipment.

8.b. Install equipment in accordance with the U.S. National Electrical Code, all local codes and the manufacturer’s recommendations.

8.c. Ground the equipment in accordance with the U.S. National Electrical Code and the manufacturer’s recommendations.

Refer to http://www.lincolnelectric.com/safety for additional safety information.

TABLE OF CONTENTS

1.0 GENERAL DESCRIPTION 1

2.0 INSTALLATION 3

2.1 POWER-UP TESTING PROCEDURE 3
2.2 CURRENT SENSOR INSTALLATION 4
2.3 VOLTAGE SENSOR CABLE INSTALLATION 5
2.4 GAS FLOW INSTALLATION 5
2.5 WIRE SPEED TRANSDUCER INSTALLATION 6
2.6 TRAVEL SPEED TRANSDUCER INSTALLATION 6
2.7 TEMPERATURE SENSOR INSTALLATION 7
2.8 PRINTER INSTALLATION 7
2.9 REMOTE I/O CABLE INSTALLATION 8

3.0 WDL-3 SETUP 9

3.1 ALTER MODE SUB MENU SCREENS 9
3.2 EDIT MENU PARAMETERS 10
3.3 FUNCTION AND DESCRIPTION OF MENU PARAMETER SCREENS 11

4.0 WELD MONITORING 26

4.1 ARC DETECT (ARC ON / ARC OFF) 26
4.2 WELD DATA SCREEN 27
4.3 MONITORING WELDING DATA 27
4.4 TOTALIZE WELD DATA 28

5.0 COMMUNICATIONS MODBUS MEMORY MAP 33

5.1 GENERAL DESCRIPTION 33
5.2 SUPPORTED MODBUS COMMANDS 33
5.3 MEMORY MAP FOR SENSOR 33
5.4 COIL DEFINITIONS AND OPERATION 35
5.5 REGISTER DEFINITIONS 36

6.0 ETHERNET COMMUNICATIONS SETUP 38

7.0 USB COMMUNICATIONS SETUP 41

8.0 INSTALLATION DRAWINGS AND PARTS LISTS 47

8.1 WDL-3 STANDARD SYSTEM CONFIGURATIONS 47
8.2 WDL-3 SYSTEM UPGRADES 48
8.3 CURRENT SENSOR KIT 49
8.4 VOLTAGE SENSE CABLE 50
8.5 WIRE SPEED SENSOR KITS 51
8.6 TRAVEL SPEED SENSOR KIT 57
8.7 GAS FLOW SENSOR KIT 59
8.8 TEMPERATURE SENSOR KITS 61
8.9 I/O CABLE 63
8.10 SERIAL PRINTER KIT 64
7.11 ETHERNET CONFIGURATIONS 65
8.12 HIGH FREQUENCY ISOLATION KIT 66

APPENDIX 67

1.0 GENERAL DESCRIPTION

The Weld Data Logger (WDL-3) is an arc welding data collection system, which can be used to monitor all arc welding processes. The unit has a microcontroller-based data acquisition PCB assembled with an OLED or equivalent graphic 256x64 pixel display, four user programming buttons, three optically isolated inputs and three isolated solid-state relay (SSR) outputs.

System Specifications:

CODE	DESCRIPTION
Dimension	Approximate: 7.75" wide x 4.5" deep x 2.5" high
Weight	4 lbs. (1.8kg)
Power Input	12 – 32vdc @ 0.5 amps (nominal 24 VDC input)
Operating Temperature	-20ºC (-4ºF) to 60ºC (-140ºF)
Relay Outputs	Optically isolated 48 VDC @ 0.1 amp solid state relays (SSR)
Logic Inputs	Optically isolated 12 – 24 VDC @ 10ma
Ethernet Port	RJ45 Ethernet 10Base-T or 100Base-TX (auto-sensing)
Compatibility	Ethernet: Version 2.0/IEEE 802.3 (electrical), Ethernet II frame type
Management	Internal WEB server, SNMP (read only), Telnet Login, and Serial Login
Protocols	ARP, UDP/IP, TCP/IP, Telnet, ICMP, SNMP, DHCP, BOOTP, TFTP, Auto IP, SMTP, and HTTP
Web Sever	Serves static web pages and Java applets with 384K byte storage capacity
Sample Rate	Raw data 25 kHz and filters this rate down to 1 kHz

Voltage Sensor Specifications:

CODE	DESCRIPTION
Range	0-100 VDC
Accuracy	±2.0% full scale ±2 digits
Resolution	0.1 volts

Current Sensor Specifications:

CODE	DESCRIPTION
Range	0-1000 ADC
Accuracy	±1.0% full scale ±2 digits
Resolution	1 ADC

Optional Wire Speed Sensor Specifications:

CODE	DESCRIPTION
Range	10 – 1000 IPM (1- 420 mm/s)
Accuracy	±3.0% full scale ±2 digits
Resolution	1 IPM (1mm/s)

Optional Travel Speed Sensor Specifications:

CODE	DESCRIPTION
Range	1.0 – 100.0 IPM (0.4-42mm/s)
Accuracy	±3.0% full scale ±2 digits
Resolution	0.01 IPM (0.1mm/s)

Optional Gas Flow Sensor Specifications:

CODE	DESCRIPTION
Range	5-255 CFH (2 – 120LPM)
Accuracy	±3% of full scale ±1 digit
Resolution	1 CFH (LPM)
Gas Type	(Standard) Argon, Argon/CO2 (95/5, 90/10, 80/20, 75/25), CO2, Helium

Optional Temperature Sensor Specifications:

CODE	DESCRIPTION
Range	1-1000º F (1 - 537 C)
Accuracy	Depends to type of sensor
Resolution	1º

The WDL-3 has the following features:

- Internal Non-Volatile memory to store up to 4,000 welds summaries
- Compact NEMA 12 rated enclosure with “M12” style mini circular connectors.
- Ethernet port for remote data uploads using Modbus TCP/IP protocol or USB port for PC serial communications with Modbus RTU protocol
- All run time weld data is collected from the enabled sensors. The WDL-3 will summarize the data at the end of the weld. The data is stored with a Date/Time stamp, Station ID and a sequential weld count number.
- The WDL-3 will calculate a Heat Input using a user entered Weld Length, Manual Travel Speed Value or an Optional Travel Speed Sensor.
- The User can enable the Temperature when not welding for Pre-Heat values. The measured Temperature value will display on the WDL-3 Idle screen. An Optional Thermocouple or IR Sensor must be purchased for this feature.

2.0 INSTALLATION

This section contains the following information on the installation of the WDL-3 system:

- Power-up testing
- Installation of system transducers and sensors
- Printer installation

2.1 POWER-UP TESTING PROCEDURE

Begin the installation of a WDL-3 system by performing the following:

1. Carefully unpack the unit and associated transducers, sensors, and cables. Inspect the items for possible shipping damage and report any damage to the carrier.

2. Locate the power adaptor assembly and insert the connector into the power receptacle on the rear panel of the unit. Plug the power adaptor into a suitable power source.

NOTE: *The WDL-3 power adaptor can operate on either 115 VAC or 220 VAC 50/60 HZ. Only use the Power Adaptor provided by CWT with the WDL-3. Use of a third party or over the counter power adaptor with the WDL-3 will void the Warranty. If the power adaptor is lost or damaged order a replacement unit PN # A3T0003.*

3. Install all of the sensors and connect each sensor cable to the back of the WDL-3 (see paragraph 2.2 through 2.8 for sensor installation).

4. Power up the unit by pressing the power switch on the front panel. The unit responds as follows:

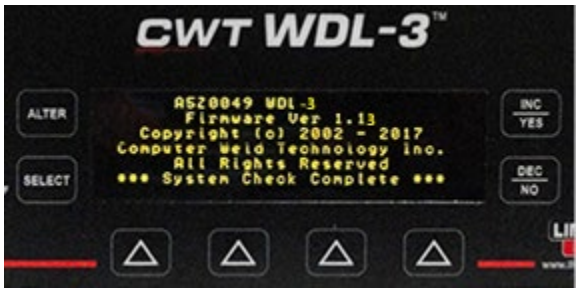

Once the internal diagnostic tests are complete, the following **Idle Screen** is displayed:

NOTE: The Display on your WDL-3 may vary based on the values set for Date, Time, Printer Status, ETM, Sensors Enabled and Temperature Display Enabled in the WDL-3.

2.2 CURRENT SENSOR INSTALLATION

The Current Sensor assembly consists of a Hall-Effect clamp on device and a cable assembly for connection to the unit. **The Current Sensor should be installed around the negative welding cable lead from the power supply**. **The two "RED DOTS" on the sensor should be oriented toward the most positive potential.** The location of the sensor is not critical and the welding cables may be as long as required for the application.

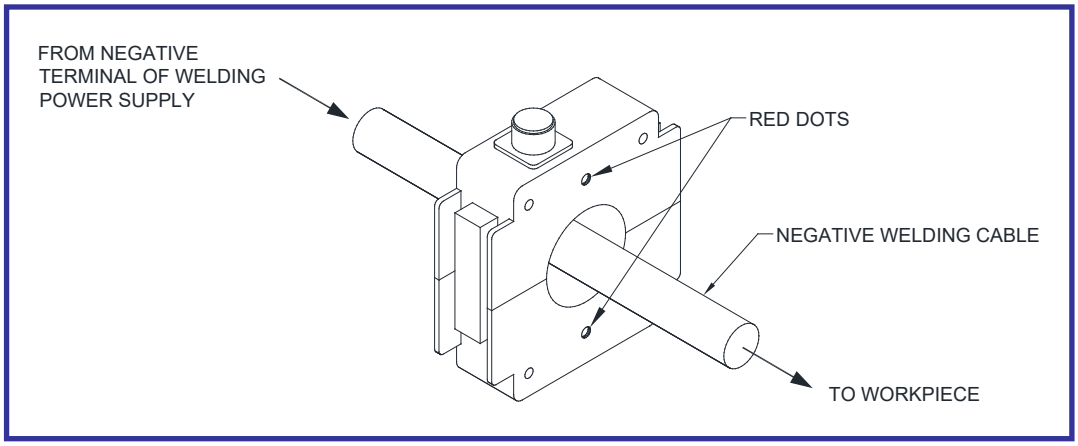

2.2.1 CURRENT SENSOR CABLE INSTALLATION

The Current Sensor is supplied with a 6 meter cable. To connect the sensor cable to the unit, locate the connector labeled **"AMPS"** on the rear of the unit chassis. Insert the plug into the **"AMPS"** connector and rotate cable connector so that the cable connector "KEY" matches the "KEY SLOT" in the WDL-3 AMPS connector. Rotate the cable connector barrel clockwise to secure it into the WDL-3 AMPS connector.

NOTE: Do Not Roll excess cable length in a circle. If the sensor cable is too long for the application loop excess cable in an "S" shape and tie it in the center. Install the sensor cable with as much distance from the Power Source Welding Cables as possible.

2.3 VOLTAGE SENSOR CABLE INSTALLATION

The Voltage Sensor Cable assembly consists of a 6 meter cable assembly with a Positive (+) lead connection and a Negative (-) lead connection for ARC Voltage Sensor.

The Voltage Sensor Cable has two leads, one **RED** and one **BLACK**, to facilitate the connection of the sensor to the welding system. Connect the **ELECTRODE** lead as close to the welding torch as possible in order to assure proper ARC Voltage measurement (See Application Table). Connect the leads to the appropriate location indicated in the table below. If the connections provided on the Voltage Sensor Cable leads are not suitable, any appropriate connector can be used. If the lead lengths are not the required length, they may be shortened or lengthened using the appropriate wire type. (See Application Table.)

Application Table

APPLICATION	RED (+) LEAD	BLACK (-) Lead
GMAW	Electrode	Work
P-GMAW	Electrode	Work
GTAW	Work	Electrode
P-GTAW	Work	Electrode
SMAW (Rev. Pol)	Electrode	Work
SMAW (St. Pol.)	Work	Electrode
FCAW	Electrode	Work
PAW	Work	Electrode
P-PAW	Work	Electrode
SAW	Electrode	Work

2.3.1 VOLTAGE SENSOR CABLE INSTALLATION

To connect the Voltage Senor Cable to the WDL-3, locate the connector labeled **"VOLTS"** on the rear of the unit chassis. Insert the cable plug into the **"VOLTS"** connector and rotate cable connector so that the cable connector "KEY" matches the "KEY SLOT" in the WDL-3 VOLTS connector. Rotate the cable connector barrel clockwise to secure it into the WDL-3 VOLTS connector.

NOTE: If welding using a High Frequency (HF) ARC Start you must order the Voltage Sensor cable with the in-line filter for use with a HF ARC Start.

WARNING

Failure to use the correct Voltage Sensor cable will cause damage to the WDL-3 and VOID the WDL-3 Warranty.

2.4 GAS FLOW INSTALLATION

The Gas Flow option consists of a transducer assembly (the GFM) and a sensor cable. The unit is designed to measure gas flows with a maximum inlet pressure of 50 psi. The transducer should be installed with supplied fittings, in the welding shielding gas lines, on the outlet side of the gas control solenoid valve. The unit should be located as close to the welding torch as practical.

NOTE: To avoid damage to the transducer assembly, do not use any type of pipe dope when making the connection.

The transducer should be placed as far as possible from any source of high frequency interference, such as a GTAW welding power supply.

2.4.1 GAS FLOW CABLE INSTALLATION

To connect the Gas Flow Sensor cable to the WDL-3, locate the connector labeled **"GAS"** on the rear of the unit chassis. Insert the Cable plug into the **"GAS"** connector and rotate cable connector so that the cable connector "KEY" matches the "KEY SLOT" in the WDL-3 GAS connector. Rotate the cable connector barrel clockwise to secure it into the WDL-3 GAS connector.

2.5 WIRE SPEED TRANSDUCER INSTALLATION

The Wire Feed Speed transducer consists of an optical tachometer, a precision drive wheel, a mounting housing, and a control cable. This device is designed to be placed directly on the welding wire. A fixed or stationary mounting of the wire feed speed transducer to the wire feeder is the required method of installation. The transducer is electrically isolated from the welding electrode so the transducer can be mounted to any part of the wire feeder.

NOTE: Make sure when permanently mounting the transducer on the wire feeder that the inlet and outlet of the transducer are in line with the wire guides of the wire feeder.

An optional clip-on wire speed transducer can be purchased and installed by simply clamping it over the welding wire at some point prior to where the wire enters the wire feeder. This device is designed to clamp directly on the welding wire and can be installed without the removal of the welding wire from the wire feeder during installation. To install the wire speed transducer using this method, simply depress the handle on the top of the transducer, slip the assembly over the wire, and release the handle.

2.5.1 WIRE SPEED TRANSDUCER CABLE

To connect the Wire Feed Speed Transducer cable to the WDL-3, locate the connector labeled **"WIRE"** on the rear of the unit chassis. Insert the cable plug into the **"WIRE"** connector and rotate cable connector so that the cable connector "KEY" matches the "KEY SLOT" in the WDL-3 WIRE connector. Rotate the cable connector barrel clockwise to secure it into the WDL-3 WIRE connector.

2.6 TRAVEL SPEED TRANSDUCER INSTALLATION

The Travel Speed Transducer assembly consists of a tachometer that measures the travel speed of the welding torch and a cable assembly. The sensor is a surface contact device supplied with a spring-loaded hinge to ensure proper surface tension. The hinge provides for a +20 to -10 degree movement of the transducer with respect to the drive carriage of the torch. In order to ensure accurate measurement, the transducer must be rigidly mounted on the drive carriage with the drive wheel perpendicular to the drive surface. The Drive Surface must be smooth and flat with no obstructions to the contact wheel of the Travel Speed Sensor. The Sensor Wheel is a surface contact device and must be located away from the heat produced by the welding process.

2.6.1 TRAVEL SPEED TRANSDUCER CABLE INSTALLATION

To connect the Travel Speed Transducer cable to the WDL-3, locate the connector labeled **"TRAVEL"** on the rear of the unit chassis. Insert the cable plug into the **"TRAVEL"** connector and rotate cable connector so that the cable connector "KEY" matches the "KEY SLOT" in the WDL-3 TRAVEL connector. Rotate the cable connector barrel clockwise to secure it into the WDL-3 TRAVEL connector.

2.7 TEMPERATURE SENSOR INSTALLATION

The WDL-3 has two Temperature Sensor options:

2.7.1 INFRARED SENSOR

The Sensor consists of an electronics module that processes information gathered by the IR sensor and provides appropriate input to the WDL-3. Refer to manufacturer's manual for IR Sensor installation.

2.7.2 THERMOCOUPLE SENSOR

The Sensor consists of an enclosure for housing the necessary electronics to convert collected data to a usable signal for input to the WDL-3 and a sensor cable. The **user supplies** the appropriate contact sensor probe (Thermocouple Wire, Type "K", Type "J", or Type "T" depending on desired temperature range). The selected "Type" of contact sensor probe (Thermocouple Wire) must be attached to the point on the work piece from which temperature data is desired.

2.7.3 TEMPERATURE SENSOR CABLE INSTALLATION

To connect the Temperature Sensor to the Weld Data Logger with the supplied 6m cable, the following is required:

INFRARED SENSOR - Connections on the sensor end of the cable are made to the numbered terminal strip on the electronics module. To connect the sensor cable to the unit, locate the connector labeled "TEMP" on the rear of the unit chassis.

THERMOCOUPLE - The Thermocouple Sensor is supplied with a 6m cable. To connect the sensor cable to the unit, locate the connector labeled "TEMP" on the rear of the unit chassis.

2.8 PRINTER INSTALLATION

The WDL-3 system is designed for use with any standard Serial Printer Interface. The WDL-3 only prints in a 40-column configuration. An 80-column printer with a Serial Printer Interface can be used with the WDL-3 but will only print in 40 column mode.

To connect the printer to the WDL-3, insert the printer serial cable into the Printer Port on the connector panel.

Connect the Printer end of the cable to the Printer Serial connection.

Connect the printer power supply to a 115 VAC power source.

Consult the Printer Operators Manual for paper and ribbon installation procedures.

Apply power to the printer by setting the ON / OFF switch to ON.

Enable the WDL-3 Print Function in the SETUP PARAMETERS Sub Menu.

2.9 REMOTE I/O CABLE INSTALLATION

The Remote I/O Cable provides the user with Remote Control ARC ON Inputs, Control Ready and ARC status outputs from the WDL-3. The cable provides the following features:

3– 24 VDC Inputs

- Input 1 – Remote ARC Off Input (Used In conjunction with Auto ARC Detect) Will terminate the data collection (ARC OFF) when set high. Auto ARC Detect must be set to YES for this function.
- Input 2 – Remote ARC ON Input (Used as substitute for Auto ARC Detect) Will activate the data collection (ARC ON) when set High and Terminate data collection (ARC OFF) when set Low. Auto ARC Detect must be set to NO for this function.
- Input 3 – Not Defined (for Future use)
- Remote Input COM

3 – 24VDC Outputs

- Output 1 – Control Ready (Active High at Power ON)
- Output 2 – ARC Active (Active High during ARC ON Status)
- Output 3 – Not Defined (for Future use)
- Remote Output COM

Typical Remote I/O Cable Installation

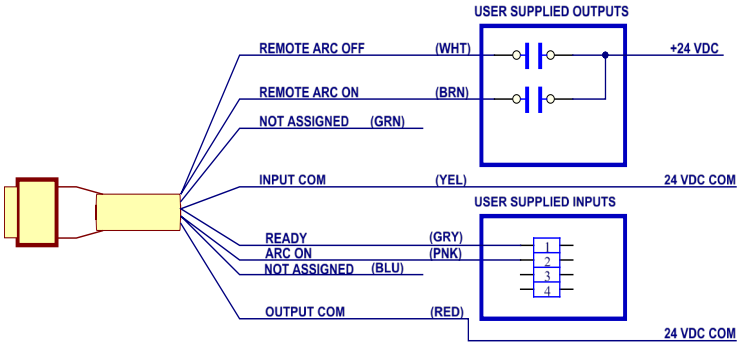

REMOTE I/O CABLE CONNECTIONS

3.0 WDL-3 SETUP

Prior to using the WDL-3 the operator must set the Modes and Parameters in the WDL-3 so the unit captures the data in the desired manner.

The WDL-3 has two SUB MENUS for setting these features and they are accessed using the WDL-3 display. The two SUB MENUS are the WELD PARAMETERS Menu and the SETUP PARAMETERS Menu.

3.1 ALTER MODE SUB MENU SCREENS

To enter the SUB MENUS using the Display press the “ALTER” key.

Press the ALTER button

The **WELD PARAMETER** Menu

To move between the two menus use the **INC / YES** or the **DEC / NO** buttons

The **SETUP PARAMETERS** Menu

To exit, press the SELECT button

To enter a menu for editing, press the SELECT button

3.2 EDIT MENU PARAMETERS

Use the following procedure to change any MENU PARAMETER:

After the desired SUB MENU is selected, use the **INC / YES** or the **DEC / NO** Buttons to move between the Parameters in the menu.

The WELD PARAMETER MENU:

Press the SELECT button to enter the Weld Parameters menu

The ARC ON AMPS Parameter value will display

To **change any of the parameter values** on any screen perform the following procedure:

1. Press the “SELECT” Button and a FLASHING Cursor will appear to the right of the parameter value.

2. Use the **INC / YES** or the **DEC / NO** Buttons to change the Parameter Value. If the **INC / YES** or the **DEC / NO** Buttons are pressed and held the value will change slowly for the first 2 seconds and then rapidly until the button is released.

3. Once the desired value is displayed press the “SELECT” button and the value is saved in the WDL-3.

4. A Parameter with a “YES” or “NO” value is changed in the same manor.

5. Press the “SELECT” Button and a FLASHING Cursor will appear to the right of the “YES / NO” parameter value.

6. Use the **INC / YES** or the **DEC / NO** Buttons to change the Parameter Value.

7. Press the “SELECT” Button to SAVE the value in the WDL-3.

3.3 FUNCTION AND DESCRIPTION OF MENU PARAMETER SCREENS

The PARAMETERS found in the **WELD PARAMETERS** MENU:

- **ARC ON AMPS**

"ARC ON AMPS =" The actual welding ARC Current must be greater than this value as part of the "AUTO ARC ON" feature of the WDL-3. The ARC is "OFF" when the Current drops below this value. (See Section 4 Weld Monitoring for full ARC ON / ARC OFF description.)

- **ARC ON VOLTS**

"ARC ON VOLTS =" – The actual welding ARC Voltage must be greater than this value as part of the "AUTO ARC ON" feature of the WDL-3. The ARC is "OFF" when the Voltage drops below this value. (See "**Chapter 4 Monitoring Welding Data**" for full ARC ON / ARC OFF description)

- **MIN WELD TIME**

"MIN WELD TIME =" – This value specifies the minimum Welding ARC Time required to accept and store the data in memory as a valid weld. If the arc time is less than this value the weld counter will not increment and the data will not be summarized or totaled. This value should be set to a value less than the actual weld time. Setting the value to zero will allow all ARC ON conditions to increment the weld and summary counter and store the data in memory. (Welding ARC Time = ARC ON to ARC OFF)

- **PRINT CYCLE TIME**

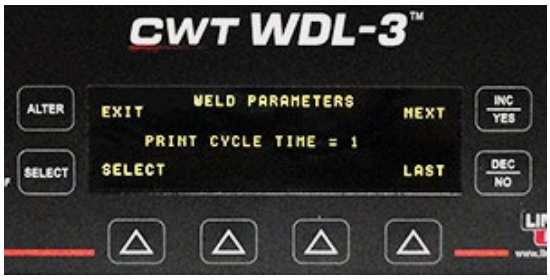

"PRINT CYCLE TIME =" – Specifies the time between print cycles when the "PRINT ALL" mode set to "YES". The time is in seconds and the minimum time is 1 second. The Data printed is an AVERAGED data sample for the data collected between print cycles.

- **DEFAULT TRAVEL**

"DEFAULT TRAVEL =" – The Default Travel Speed is used when a Travel Speed Sensor is not practical for the welding application (such as Manual Stick Electrode Welding). When the Travel Speed Sensor is disabled (set to "NO") the WDL will use this value to calculate the heat input values when the HEAT Sensor is enabled (set to "YES"). Set the Default Travel to .0 when a weld length is used to calculate heat input for totalized welds.

- **TRAVEL SPEED SCALE**

"TRAVEL SPEED SCALE =" - This is a conversion factor used to convert the Travel Speed Sensor reading to actual welding Travel Speed if the sensor cannot be driven from the actual weld surface. To calculate the conversion factor use the following equation: TVS SPEED SCALE = [Diameter of actual Weld] / [Diameter of measured surface]

- **WELD LENGTH**

"WELD LENGTH =" - The Weld Length is used in lieu of a Travel Speed Sensor or a Default Travel Speed for calculating the HEAT parameter for a weld or group of welds when using the Totalize Welds Function. The WDL-3 uses the ARC Time and the Weld Length to calculate a Travel Speed.

- **SUMMARY COUNT**

"SUMMARY COUNT =" - Indicates the number of Weld Summaries that are stored in memory. **Maximum number is 2000 welds**. The WDL-3 will stop saving Weld Summaries once the maximum number is reached. To reset the counter use the "CLEAR SUMMARY" Parameter in the "SETUP PARAMETERS" Menu.

- **TOTALIZE COUNT**

"TOTALIZE COUNT =" - Indicates the number of Totalized Weld Summaries that are stored in memory. **Maximum number is 100 welds**. The WDL-3 will stop saving Totalized Weld Summaries once the maximum number is reached. To reset the counter use the "CLEAR TOTALS" Parameter in the "SETUP PARAMETERS" Menu.

- **WELD COUNT**

"WELD COUNT =" - Number of "Valid Welds" made (See Section 4 Weld Monitoring for description of "Valid Weld"). The Weld Count is displayed on the WDL-3 Idle Screen and it is saved and printed with the weld summary and actual weld data. The counter is sequential. The Count starts with 0, after being reset and has a Maximum number of 62500. When the counter reaches the Maximum number it will roll over to 0 and start counting up again. The user can set the Weld Count value to any desired number from 0 – 62500. To reset the counter use the "CLEAR WELD COUNT" Parameter in the "SETUP PARAMETERS" Menu.

- **READ RECORD NUMBER**

"READ RECORD NUMBER =" – To view a Weld Summary stored in memory, enter the Summary Number using the INC / YES or DEC / NO button, press the Select Button and then the ALTER Button. The Summary Data for the selected record is displayed in the Weld Summary Screen of the WDL-3.

NOTE: The "SAVE SUMMARY" Parameter in the "SETUP PARAMETERS" Menu must be set to "YES" to use this function.

- **READ TOTALIZED WELD**

"READ TOTALIZED WELD =" – To view a TOTALIZED Weld Summary stored in memory, enter the TOTALIZED Weld Number using the INC / YES or DEC / NO button, press the Select Button and then the ALTER Button. The Summary Data for the selected record is displayed in the Weld Summary Screen of the WDL-3.

NOTE: The "SAVE TOTAL" Parameter in the "SETUP PARAMETERS" Menu must be set to "YES" to use this function.

- **READ SUMMARY WELD**

"READ SUMMARY WELD =" – To view a Saved Weld Summary stored in memory, enter the SUMMARY Weld Number using the INC / YES or DEC / NO button, press the Select Button and then the ALTER Button. The Summary Data for the selected record is displayed in the Weld Summary Screen of the WDL-3.

NOTE: The "SAVE SUMMARY" Parameter in the "SETUP PARAMETERS" Menu must be set to "YES" to use this function.

The PARAMETERS found in the **<u>SETUP PARAMETERS</u>** MENU:

- **PRINT ENABLED**

"PRINT ENABLED =" – This parameter turns the Print Data Function ON (YES) and OFF (NO).

- **PRINT ALL**

"PRINT ALL =" – This parameter turns the Print ALL Weld Data Function ON (YES) and OFF (NO). When this parameter is set to **"YES"**, the WDL-3 will print weld data samples during the weld at the set "PRINT CYCLE TIME" Value and a Weld Summary Report at ARC OFF. When this parameter is set to **"NO",** the WDL-3 will only print a Weld Summary Report at ARC OFF.

- **SAVE SUMMARY**

"SAVE SUMMARY =" – This parameter turns the SAVE WELD SUMMARY DATA to memory ON (YES) and OFF (NO). When set to "YES" the WDL-3 will store the Weld Summary Record Data for each weld to memory (MAX number of Summary Welds = 2000).

- **SAVE TOTALS**

"SAVE TOTALS =" – This parameter turns the SAVE TOTALIZED WELDS DATA to memory ON (YES) and OFF (NO). When set to "YES" the WDL-3 will store the Totalized Weld Summary Data to memory (MAX number of Totalized Weld Summaries = 100).

- **CLEAR WELD COUNT**

"CLEAR WELD COUNT =" – This parameter resets the WDL-3 Weld Counter to "0" when set to YES.

- **CLEAR SUMMARY**

"CLEAR SUMMARY =" – This parameter resets the WDL-3 Summary Welds Counter to "0" when set to YES. This will CLEAR (Delete) ALL saved Weld Summaries in Memory.

- **CLEAR TOTALS**

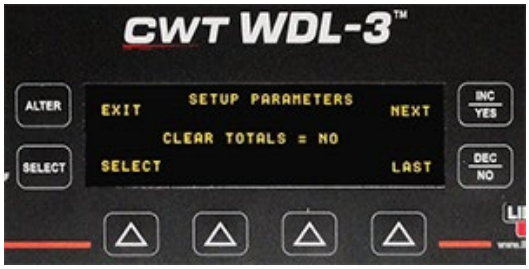

"CLEAR TOTALS =" – This parameter resets the WDL-3 Totalized Welds Counter to "0" when set to YES. This will CLEAR (Delete) ALL saved Totalized Welds in Memory.

- **CLEAR ARC TIMER**

"CLEAR ARC TIMER =" – This parameter resets the WDL-3 ARC Timer to "0" when set to YES.

- **ENABLE AUTO ARC DETECT**

"ENABLE AUTO ARC DETECT = " – When set to **"YES"** the WDL-3 will use the ARC ON VOLT and ARC ON AMP values to determine that a Weld ARC is initiated and start logging weld data. When the values received from the volt and current sensor reach or exceed the set ARC ON values the WDL-3 will set ARC ON. When the values received from the volt and current sensor drop below the set ARC ON values the WDL-3 will clear the ARC ON and stop logging data.

When set to **"NO"** the WDL-3 will set the ARC ON based on the Remote ARC ON Input received through the Remote I/O Cable.

NOTE: THIS SECTION OF THE SETUP PARAMETERS IS USED TO TURN SENSOR FUNCTIONS ON (YES) AND OFF (NO). <u>ONLY ENABLE SENSORS THAT ARE CONNECTED TO THE WDLIII.</u>

- **ENABLE VOLTS**

"ENABLE VOLTS =" – This parameter enables the WDL-3 Voltage Sensor when set to YES. The Letter "V" will display on the WDL-3 Idle Screen to indicate the sensor is enabled.

- **ENABLE AMPS**

"ENABLE AMPS =" – This parameter enables the WDL-3 Current Sensor when set to YES. The Letter "A" will display on the WDL-3 Idle Screen to indicate the sensor is enabled.

- **ENABLE WIRE**

"ENABLE WIRE =" – This parameter enables the WDL-3 Wire Speed Sensor when set to YES. The Letter "W" will display on the WDL-3 Idle Screen to indicate the sensor is enabled.

- **ENABLE TRAVEL**

"ENABLE TRAVEL =" – This parameter enables the WDL-3 TRAVEL SPEED Sensor when set to YES. The Letter "T" will display on the WDL-3 Idle Screen to indicate the sensor is enabled.

- **ENABLE GAS**

"ENABLE GAS =" – This parameter enables the WDL-3 GAS FLOW Sensor when set to YES. The Letter "G" will display on the WDL-3 Idle Screen to indicate the sensor is enabled.

- **ENABLE TEMP**

"ENABLE TEMP =" – This parameter enables the WDL-3 TEMPERATURE Sensor when set to YES. The Letter "D" will display on the WDL-3 Idle Screen to indicate the sensor is enabled. The WDL-3 can use INFRARED and K, J and T THERMOCOUPLE Sensors.

- **ENABLE HEAT**

"ENABLE HEAT =" – This parameter enables the WDL-3 HEAT Calculation when set to YES. The Letter "H" will display on the WDL-3 Idle Screen to indicate the Calculation is enabled. The HEAT parameter is calculated in K joules/inch based on the voltage, current, and travel speed inputs according to the following formula:

HEAT INPUT = [(VOLT)(AMP)(60)]/[(TRAVEL)(1000)] {ASME Sec IX QW-409.1(a)}

- **ENABLE POWER**

"ENABLE POWER =" – This parameter enables the WDL-3 POWER Calculation when set to YES. The Letter "P" will display on the WDL-3 Idle Screen to indicate the Calculation is enabled. The POWER Value is calculated in Joules based on the voltage, current, and ARC Time inputs according to the following formula:

POWER INPUT = Power (KJoules) = (Volt x Amp x ARC TIME(s) / 1000) {ASME Sec IX QW-409.1(c)(2)}

- **ENABLE IR SENSOR**

"ENABLE IR SENSOR =" – This parameter enables the WDL-3 IR Sensor when set to YES. If a THERMOCOUPLE Sensor is used with the WDL-3 set this Parameter to "NO".

- **A0A0182 TRAVEL SENSOR**

"A0A0182 TRAVEL SENSOR =" – If the A0A0182 Travel Speed Sensor was purchased for use with the WDL-3; set this parameter to "YES".

- **ENABLE METRIC**

"ENABLE METRIC =" – This parameter enables the WDL-3 METRIC Conversion when set to YES. The display and recorded data of the Wire Feed Speed, Travel Speed, Gas Flow, Temperature Sensors and Heat Calculation values will be in metric.

- **RTC HOUR**

"RTC HOUR =" – This parameter sets the Real Time Clock Hour (RTC). The RTC is a 24 hour clock.

- **RTC MINUTE**

"RTC MINUTE =" – This parameter sets the Real Time Clock Minute.

- **RTC SECOND**

"RTC SECOND =" – This parameter sets the Real Time Clock Second.

- **RTC MONTH**

"RTC MONTH =" – This parameter sets the Real Time Clock Month.

- **RTC DAY**

"RTC DAY =" – This parameter sets the Real Time Clock Day.

- **RTC YEAR**

"RTC YEAR =" – This parameter sets the Real Time Clock YEAR.

- **STATION ID**

"STATION ID =" – This parameter sets the WDL-3 Station ID Number. This number is saved with Summary and Totalized Weld Data. The Station ID is numeric only and is used to differentiate data from multiple WDL-3 units at the same location. Each WDL-3 should have a different ID number. The Station ID number range is 0 – 65535.

.

- **DEVICE ID**

"DEVICE ID =" – This parameter sets the Device ID used in Modbus communications protocol. If multiple devices are on a network each unit must have an individual ID for communications. (ID number range is 1 – 247)

- **BAUD RATE**

"BAUD RATE =" – Baud rate of Modbus communication can be changed by selecting numbers from 2 to 3.

2 – 19200 Baud
3 – 115200 Baud

The default selection is 2 for 19200 baud rate.

- **ENABLE DEG DISPLAY**

"ENABLE DEG DISPLAY =" – When set to "YES" the Temperature is displayed on the main Idle Screen of the WDL-3 when not welding. This feature will not affect Temperature Data collected while logging during an ARC ON Condition. The Thermocouple or IR Sensor must be installed for this feature.

- **IDLE SCREEN DISPLAY WITH DEG DISPLAY ENABLED**

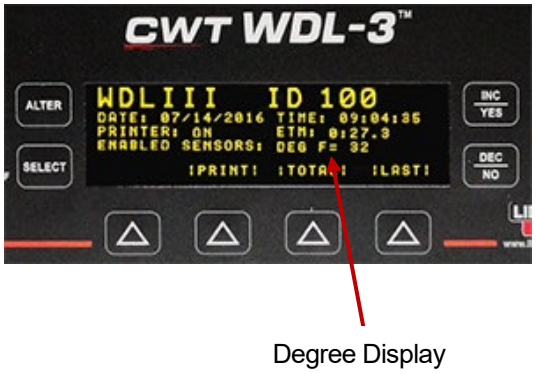

4.0 WELD MONITORING

Once the INSTALLATION and SETUP procedures are complete the WDL-3 is ready to collect, display and store weld data. After power up, the WDL-3 will display the Idle Screen. From the Idle Screen you have the ability to access the LAST Weld Summary Screen, the TOTAL (Totalize) Welds Screen and the PRINT (Manual Print) Function.

- **THE IDLE SCREEN**

The IDLE Screen displays the DATE and TIME, Printer Status (ON/OFF), TOTAL WELD ARC TIME (ETM:0:00.0) and sensors enabled. The "LAST" Weld Summary will always display even if no welds have been collected and stored in memory. The "TOTAL" will display once a weld summary has been saved to memory. The "PRINT" will display only when the PRINT function is enabled (YES).

"LAST" button – The LAST button will display the Weld Summary from the "LAST" weld collected. It is also used when a Weld Summary or Totalized weld is read from memory using the "READ" Functions in the WELD PARAMETERS Sub Menu.

"PRINT" button – The PRINT button will print the data loaded in the "LAST" screen.

"TOTAL" button – The TOTAL button provides access to the Totalize Weld(s) function. See Section 4.4 Totalize Weld Data.

4.1 ARC DETECT (ARC ON / ARC OFF)

WELD ARC DETECT (ARC ON)

For the WDL-3 to start collecting it must detect a Welding ARC ON condition. There are three ways to set the ARC ON conditions for the unit. (ARC ON Detect Parameters are found in the Weld Parameters Sub Menu. See Section 3 WDL-3 SETUP.)

ARC ON DETECT with VOLT and AMPS: The normal configuration for the WDL-3 ARC ON Detect is with both Voltage and Current minimum values set for a Stable ARC ON Condition. In this mode the Voltage and AMP Sensors are enabled (YES) and the ARC ON AMPS, ARC VOLTS and MIN WELD TIME are set to a user specified level. The WDL-3 Default values are:

ARC ON AMPS = 10 amps

ARC ON VOLTS = 5.0 volts

MIN WELD TIME = 1.5 sec

These parameter values require that the Weld ARC AMPS are above 10 AMPS, the ARC VOLTS are above 5.0 VOLTS and that they remain above those values for greater than 1.5 Seconds. Once these three conditions are met the WDL-3 will log and store the Welding ARC Data.

ARC ON DETECT with VOLTS ONLY: The user can set the WDL-3 to use the ARC ON VOLTS parameter only to detect an ARC ON Condition. In this configuration the ARC ON AMPS Parameter value is SET to 0 (zero). The WDL-3 will use the ARC ON VOLTS Parameter value and the MIN WELD TIME Parameter value to determine ARC ON. Once these two conditions are met the WDL-3 will log and store the Welding ARC Data.

ARC ON DETECT with AMPS ONLY: The user can set the WDL-3 to use the ARC ON AMPS parameter only to detect an ARC ON Condition. In this configuration the ARC ON VOLTS Parameter value is SET to 0 (zero). The WDL-3 will use the ARC ON AMPS Parameter value and the MIN WELD TIME Parameter value to determine ARC ON. Once these two conditions are met the WDL-3 will log and store the Welding ARC Data.

NOTE: Setting the ARC ON VOLTS and ARC ON AMPS to 0 (zero) will place the WDL-3 into a continuous ARC ON Condition. This is not a recommend or valid weld data collection method.

ARC OFF occurs when the Welding Volts and AMPS drop below the ARC ON VOLTS and AMPS value.

4.2 WELD DATA SCREEN

WELD DATA SCREEN

At **ARC ON** the Weld Data Screen will appear.

The Weld Data Screen will only display the data from the sensors that are enabled. The ARC TIME is displayed at the bottom of the screen.

4.3 MONITORING WELDING DATA

At **ARC OFF** The Weld Summary Screen will display.

The Weld Summary Screen displays the:

SUM WELD (Weld Count). The Weld Counter is a sequential counter starting with 0 counting up to 62500. When the counter reaches the maximum number, it will reset to 0 and start counting up again. Use the CLEAR WELD COUNT parameter in the SETUP PARAMETERS Sub Menu to reset the Weld ID to 0.

DATE and TIME stamp is the ARC ON (or ARC START) date and time for each weld.

The enabled Sensor Averaged data for the weld by parameter except for time.

TIME is the total ARC TIME from ARC On to ARC OFF.

The **EXIT** button will return to the Idle Screen.

The Data Displayed in the Weld Summary Screen will remain on the screen until another valid welding ARC is detected or a Weld Summary or Totalized Weld is read from memory.

NEW FEATURE – SCROLLING THROUGH SUMMARIES AND TOTALIZED WELDS

Scrolling through saved Summaries and Totalized Welds is now possible in the Weld Summary Screen display.

When "SAVE SUMMARY" parameter is set to YES the WDL-3 will store the Weld Summary Record Data for each weld to memory (MAX number of Summary Welds = 2000). If more then 1 Summary is stored it is possible to scroll through Summaries using push buttons **INC/YES** and **DEC/NO**.

When "SAVE TOTALS" parameter is set to YES the WDL-3 will store the Totalized Weld Summary Data to memory (MAX number of Totalized Weld Summaries = 100). If more then 1 Totalized Weld is stored it is possible to scroll through Totalized Welds using push buttons **INC/YES** and **DEC/NO**.

The **SELECT** push button is used to switch between Summaries or Totalized Welds. The weld counter on the Weld Summary Screen display will have label **SUM WELD** for Summaries and **TOT WELD** for Totalize Welds when using the **SELECT** button to switch between Summaries and Totalized Welds.

4.4 TOTALIZE WELD DATA

TOTALIZE WELDS SCREEN

When the **TOTAL** button is displayed on the screen the operator has the option to totalize the Weld Summaries in memory into a single Totalized Weld Summary. Maximum number of welds that can be Totalized is 2000 Weld Summaries.

To enter the Totalize Function press the TOTAL button on the WDL-3 IDLE or SUMMARY Screen. There are five Totalize Weld SETUP Screens. Use the INC/DEC buttons to move between screens.

- **WELD LENGTH**

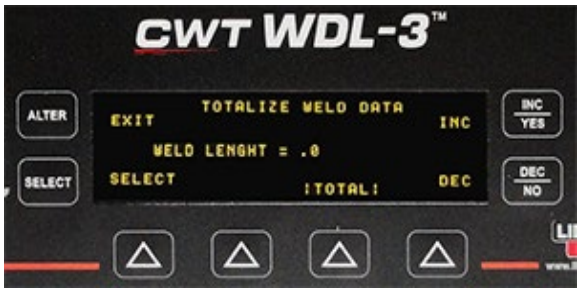

The WELD LENGTH is used to calculate the travel speed when the Travel Speed Sensor is not enabled, and no Default Travel Speed is entered. The calculated Travel Speed used to calculate HEAT when the HEAT PARAMETER is enabled.

- **DEFAULT TRAVEL Screen**

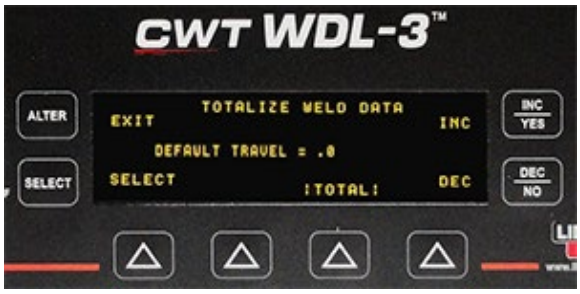

The DEFAULT TRAVEL is used when no Travel Speed Sensor is enabled. The Default Travel Speed entered is used to calculate HEAT when the HEAT PARAMETER is enabled.

- **PRINT ENABLED Screen**

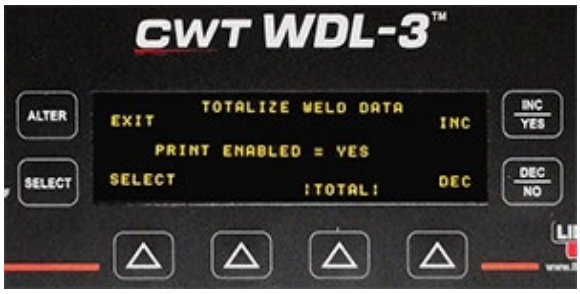

If a printer is used for data retrieval set the PRINTER ENABLE to YES by pressing the SELECT button then the INC/DEC to make a change and then press the SELECT button to save the change.

- **SAVE TOTALS Screen**

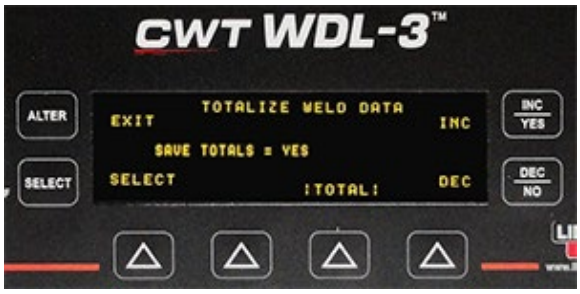

To Save the TOTALIZED Data to memory in the WDL-3 set the SAVE TOTALS to YES by pressing the SELECT button then the INC/DEC to make a change and then press the SELECT button to save the change.

- **MEMORY COUNT Screen**

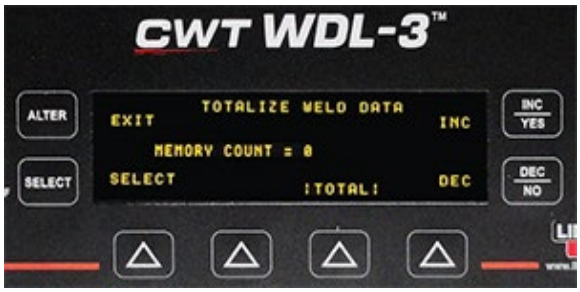

The MEMORY COUNT displays the number of weld summaries in memory for totalizing.

Once the TOTALIZE WELD DATA Screens are setup, press the TOTAL button to totalize the data. Totalized Weld data will be displayed at Weld Summary Screen display as a totalized weld.

TRAVEL SPEED AND HEAT RECALCULATION FOR SUMMARIES AND TOTALIZED WELDS

If the Travel Speed Sensor is not enabled, the Heat Input can be calculated by defining Default Travel Speed or Weld Length in the Weld Parameters Menu.

WDL-3 will use Default Travel speed for the Heat Input calculation.

If Default Travel Speed is not defined (parameter set to =.0), WDL-3 will perform calculation of the Travel Speed based on the Weld Length parameter and arc time.

When Default Travel Speed or Weld Length is known prior to performing weld, parameters can be set in Weld Parameters Menu before starting the weld and Summary of the weld after arc off will provide the Travel Speed value and the Heat Input calculated value.

When Default Travel Speed or Weld Length is not known both parameters should be set to zero (=.0) and parameters can be entered through the Weld Parameters Menu providing Summary to be recalculated using new Default Travel Speed or Weld Length visible on Weld Summary Screen display.

For Totalizing Welds, both parameters can be set on TOTAL Menu prior to totalizing summaries into totalized weld.

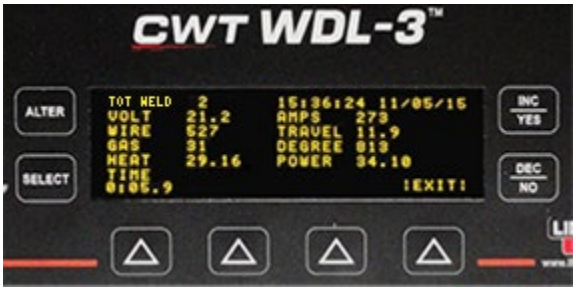

If the Default Travel Speed or the Weld Length parameters are changed the Summary or Totalized Weld will be recalculated using new values and stored.

PARAMETERS USED FOT TRAVEL SPEED / HEAT INPUT CALCULATION

- **DEFAULT TRAVEL**

"DEFAULT TRAVEL =" – The Default Travel Speed is used when a Travel Speed Sensor is not practical for the welding application (such as Manual Stick Electrode Welding). When the Travel Speed Sensor is disabled (set to "NO") the WDL will use this value to calculate the heat input values when the HEAT Sensor is enabled (set to "YES"). Set the Default Travel to .0 when a weld length is used to calculate heat input for totalized welds.

- **WELD LENGTH**

"WELD LENGTH =" - The Weld Length is used in lieu of a Travel Speed Sensor or a Default Travel Speed for calculating the HEAT parameter for a weld or group of welds when using the Totalize Welds Function. The WDL-3 uses the ARC Time and the Weld Length to calculate Travel Speed.

5.0 COMMUNICATIONS MODBUS MEMORY MAP

5.1 GENERAL DESCRIPTION

This document provides the basic Modbus memory map and command structure for the WDL-3 RS-485 communications port. The WDL-3 supports the Modbus Protocol as specified in the Modicon Technical publications "Modbus Protocol" (intr7.html). The WDL-3 control does not support the Broadcast mode. The controller provides the slave side communications routines for the RTU mode. The user must define the Slave ID to a unique ID number from 1 – 247. Default Baud rate is 19.2 K baud.

5.2 SUPPORTED MODBUS COMMANDS

The following ModBus commands are supported:

CODE	DESCRIPTION	ADDRESS RANGE
01	Read Coil Status	0-31
03	Read Holding Registers	0-21
05	Force Single Coil	0-15
06	Preset Single Register	0-21
15	Force Multiple Coils	0-15
16	Preset Multiple Registers	0-21
17	Report Slave ID	5 bytes

5.3 MEMORY MAP FOR SENSOR

The following is the Coil definitions address 0-31:

COIL	ADDRESS	DESCRIPTION
1	0	Arc Active – Set when Weld Arc is detected
2	1	Save Average Data – When set Weld Summary Data is stored in NVRAM
3	2	Clear Weld Counter – When set the Weld Counter will be reset to 1
4	3	Clear Summary Counter – When set the Average Data Counter is reset to 0 and Average Memory is cleared
5	4	Clear Arc Timer – When set the Accumulative Arc Timer is reset to 0
6	5	Disable Auto Arc Detect – When set the Arc On condition must be set by the user supplied input CR1
7	6	Read Memory – When set the Weld Summary data specified by Register 19 will be read into Register 2-12. Coil will be reset when summary has been loaded. Function is executed only when the arc is off.
8	7	Set Clock – When set the Date and Time values set in Register 7 – 12 will be loaded to the Real Time Clock. The Coil will be reset after the RTC is set. This function will only execute when the arc is off.
9	8	Enable Metric units of measure (1=Metric, 0=Imperial)
10	9	Print Enabled (1 = On, 0 = Off)
11	10	Save Totalized Data to Memory (1 = On, 0 = Off)

12	11	Print Run (Weld) Data (1=On, 0=Off)
13	12	Print 40 Column (1=Off, 0=On)
14	13	Totalize Weld Summary Date (1=On, 0=Off)
15	14	Clear Totalize Memory (1=On, 0=Off)
16	15	Travel Sensor Type (1=A3A0112,0=A3A0263)
17-20	16-19	Not Defined
21	20	Clear and Initialize Real Time Clock
22	21	Enable Temperature readings on Main Display
23	22	Enable IR Sensor (1=Off, 0=On)
24	23	Read Selected Totalize Data (1=Off, 0=On)
25-28	24-27	I/O Inputs 1 – 3
28	27	Not Defined
29-32	28-31	I/O Outputs 1 – 3
32	32	Not defined

The following is the Register definitions address 0-26:

REGISTER	ADDRESS	DESCRIPTION
1	0	Arc On Status – When the arc is active the value will be 1 when the arc is off the value will be 0
2	1	Arc Time – Weld on timer in 0.1-second intervals. Value is incremented during a weld cycle and measures the Arc On time for each weld. When the weld cycle is complete the total time for the weld will be set. (Note 100 = 10.0 sec)
3	2	Volts – During the Arc on Time the value represents the actual arc voltage. The value is in 0.1-volt increments (100=10.0 volts). When the weld cycle is complete the value will be the statistical average for the last weld.
4	3	Amps- – During the Arc on Time the value represents the actual arc current. The value is in 1amp increments (100=100 amps). When the weld cycle is complete the value will be the statistical average for the last weld.
5	4	Gas Flow - – During the Arc on Time the value represents the actual Flow rate. When the weld cycle is complete the value will be the statistical average for the last weld.
6	5	Temperature
7	6	Arc Power #.## Kj
8	7	Heat Input #.## Kj / in
9	8	Travel
10	9	Wire Speed - – During the Arc on Time the value represents the actual wire feed speed. The value is in 1-mm/sec increments (100=100 MM/Sec). When the weld cycle is complete the value will be the statistical average for the last weld.
11	10	Arc Time MSB byte
12	11	Start Weld Time in BCD SEC:MIN format
13	12	Start Weld Time in BCD HR:DATE format
14	13	Start Weld Time in MONTH:YEAR format
15	14	Sequential Weld ID number
16	15	Read stored Weld Record Number
17	16	Total number of stored weld records in memory
18	17	Total ARC Hours from last reset
19	18	Total ARC Minutes:Seconds from last reset
20	19	ARC On Amps
21	20	ARC On Volts

22	21	Min Time for Valid Weld
23	22	Total Weld Count since last reset
24	23	MSB = Sample Count:LSB = ARC Off Time
25	24	Print Cycle Time in Seconds
26	25	Default Travel Speed
27	26	Weld Length
28	27	Travel Speed Scale
29	28	Number totalize Welds in Memory
30	29	Volts – During the Arc on Time the value represents the unfiltered arc voltage rolling average. The value is in 0.1-volt increments (100=10.0 volts). Sampling rate is 4.167kHz.
31	30	Amps- – During the Arc on Time the value represents the unfiltered arc current rolling average. The value is in 1amp increments (100=100 amps). Sampling rate is 4.167kHz.

The following is a summary of the Report Slave ID and Status (Code 17) Response Data fields:

Byte	Contents
1	Sensor ID Number =10 Hex (Version 1, Rev0)
2	Run Indicator (0=OFF, FF=On)
3	Status Byte Bit 0 = Ram Full Bit 1 = Battery Ok Bit 2 = Self Test Ok Bit 3-7 = 0
4	Firmware Version Number – BCD Format (MSB = Major: ISB = Minor)
5	Firmware Version Number – BCD Format (MSB+LSB = Release)

5.4 COIL DEFINITIONS AND OPERATION

The WDL-3 has 32 simulated output coils. These coils are used as internal bit flags to perform specific functions. Only 1-19 of the simulated coils is used. Setting the coils 20-32 will not have any effect on the WDL-3 controller. However, they are reserved for future expansion. The WDL-3 supports both single and group force coil commands. Refer to Section 5.3 Memory Map for Sensor for summary of the Coil functions.

To clear the WDL-3 weld and average counters or reset the total arc timer, force the specific coil to the “ON” condition. The WDL-3 will clear the requested counter or timer and then reset the coil to the “OFF” condition signifying a successful operation.

To disable the auto arc on detection mode force coil 6 to the “OFF” condition. When reset the WDL-3 will only log data when the remote on input CR1 is asserted. To allow normal arc on detection Coil 6 must be in the “ON” condition.

To set the Real time clock perform the following steps:

1. Set Coil 6 to the “ON” condition to disable automatic arc detection.

2. Load the BCD formatted Time and Date into the value Registers 6-12.

3. Set Coil 8 to the “ON” condition. The WDL-3 will clear the coil after completing the function.

4. Enable Coil 6 to resume automatic arc detection.

To read stored weld data summaries, perform the following steps:

1. Set Coil 6 to the “ON” condition to disable automatic arc detection.

2. Load the desired weld summary number into Registers 19. This value must be equal to or less than the total number of saved welds as indicated by Register 17.

3. Set Coil 2 to the “ON” condition. The WDL-3 will load the stored data into Registers 2-12 and will clear the coil after completing the function. The data will remain in the register until the next arc on or stored weld request.

4. Enable Coil 6 to resume automatic arc detection.

5.5 REGISTER DEFINITIONS

Register 1: Used to indicate when a welding arc has been detected. When this register is a 1 the WDL-3 controller is updating the welding parameters with new measured values.

Register 2–6: Contains the current value for each of the welding parameters: The following table shows the value and units of measure for each weld parameter register:

REGISTER	MEASURED PARAMETERS	UNITS OF MEASURE
2	Arc On time – Time in 0.1 seconds from arc detection	(Value /10) sec.
3	Arc Voltage – Voltage measured by Volt sensor	(Value/10) vdc
4	Arc Current – Welding amps measured by Hall Sensor	Value = Amps DC
5	Gas Flow Rate – Shielding Gas flow from GTFM sensor	Value = CFH (lpm)
6	Wire Speed – Linear wire speed measured by encoder	Value = In/Min (mm/sec)

When the Arc is in the off condition the Registers will display the statistical average for the last weld.

Register 7-12: Contains the Time and Date at the start of the last weld. These registers will only update when a new weld is detected or a weld summary is loaded from memory. The Time and Date parameters are in BCD format. The low nibble is the 1’s units and the upper nibble is the 10’s units. Only the lower byte is used for all parameters except the year. The MSB byte holds the BCD value for the century value.

Note: *When setting the Real time Date and Time the values loaded into the Registers 6-12 must be in a BCD format.*

Register 13–15: Used to indicate the accumulative arc time. The value is an integer value and represents the total arc on time since the last reset. At the end of each weld the accumulated arc timer will be updated. Writing to these registers will have no effect on the total arc time. When the next weld occurs the new value will be written.

Register 16: The current weld count since the last weld count reset. This counter is incremented when the total arc time for a weld is greater than 0.5 seconds. This prevents false arc starts from being counted as a valid weld.

Register 17: Indicates the number of weld summaries stored in the weld memory. The maximum number of welds stored is 1365. Writing a new value to this register will cause the next collected weld to be written to that weld number location. The Welds will only be saved if the Save Weld Summary Coil 2 has been set and the minimum weld time is greater than 0.5 seconds.

Register 18: This register sets the number of raw data points to be averaged to generate a single sampled value. The minimum value is 1 and the maximum value is 255. Setting this value to 0 will disable the Analog Data collection routines.

Register 19: This register is used to read a previously stored weld summary from memory. Set the desired weld summary number in this register then set the Read Weld Memory Coil 7. The value will be written to Register 2 – 12. Maximum value is 1365.

Register 20-21: These registers are used to specify the conditions required to establish an arc on signal. To set the auto arc on signal the Voltage and Current sensor values must exceed both values stored in the these registers. If any single sensor input drops below this level the arc on signal will be reset.

Register 22: This register specifies the minimum arc on time for a weld before it is saved in memory as a new weld record.

Register 23: The total number of welds made since the last reset.

Register 24: The MSB byte is used to specify the number of samples that are averaged together for a single sample. The LSB byte specifies the minimum time for a valid arc off condition to be set (0.01 sec increments).

Register 25: Print Cycle time in 1 second increments.

Register 26: Default Travel Speed in 0.1 IPM or MM/S.

Register 27: Default Weld length used for calculation of heat input in 0.1 inch or mm.

Register 28: Travel speed scale factor (Weld Diameter/ Sensor Diameter) in .001 increments

Register 29: Number of totalized stored in memory.

Register 30: Volts – During the Arc on Time the value represents the unfiltered arc voltage rolling average. The value is in 0.1-volt increments (100=10.0 volts). Sampling rate is 4.167kHz..

Register 31: Amps- – During the Arc on Time the value represents the unfiltered arc current rolling average. The value is in 1amp increments (100=100 amps). Sampling rate is 4.167kHz..

6.0 ETHERNET COMMUNICATIONS SETUP

WDL-3 IP Setup for Optional ArcTrack 2 Software

Our recommended way to configure the IP address in the WDL-3 is to provide the WDL-3 MAC ID to your IT professional and have them assign and reserve an IP address on your network for the control. The IT personnel would then give you the IP address used on the network for the WDL-3. Enter that IP address in the TCP/IP Address window in the Setup Comm Port window of the optional ArcTrack 2 Software then click on the SET PORT button.

The WDL-3 is pre-configured for DHCP IP address connection. When connected to a network the control will request an IP address.

To configure the WDL-3 with a **fixed IP address**, preform the following:

First connect the WDL-3 to a network. Open the ArcTrack 2 Program and click on the SYSTEM CONFIG tab. Locate the “Scan Network” Pull-down window. In the pull-down window click the “Device Scan” button. The Device Scan will search for connected devices on the network.

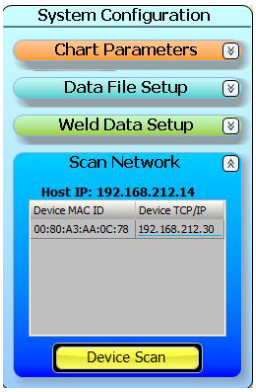

Use the IP address associated with the WDL-3 MAC ID (the MAC ID number is posted on the WDL-3).

Open your internet browser (this device does not support the Internet Explorer web browser Version 10 and above. Use Google Chrome to connect to the device). In the browser bar enter the scanned IP address associated with the device MAC ID. Example: 169.254.222.138 then press enter.

Note: The IP address you enter will be different from this example. Enter the IP address found during the Device Scan.

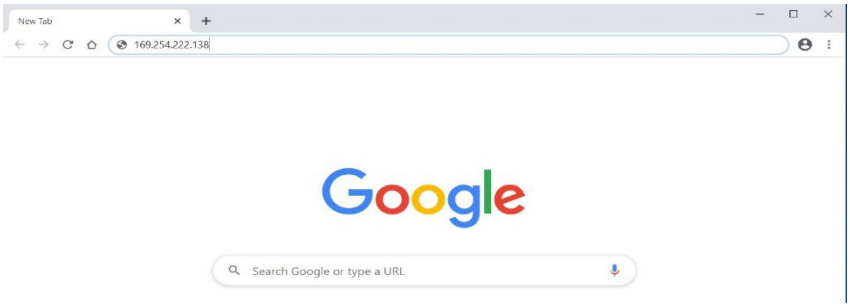

A sign in window will pop up when you connect to the device.

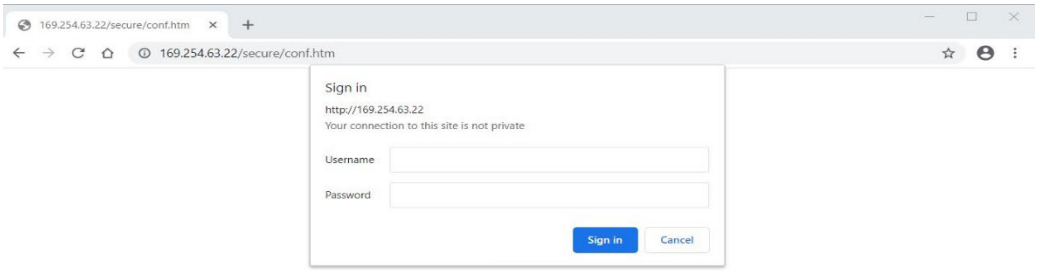

No username or password is needed. Click the “Sign in” button

The Device Modbus Bridge Configuration Manager page will open.

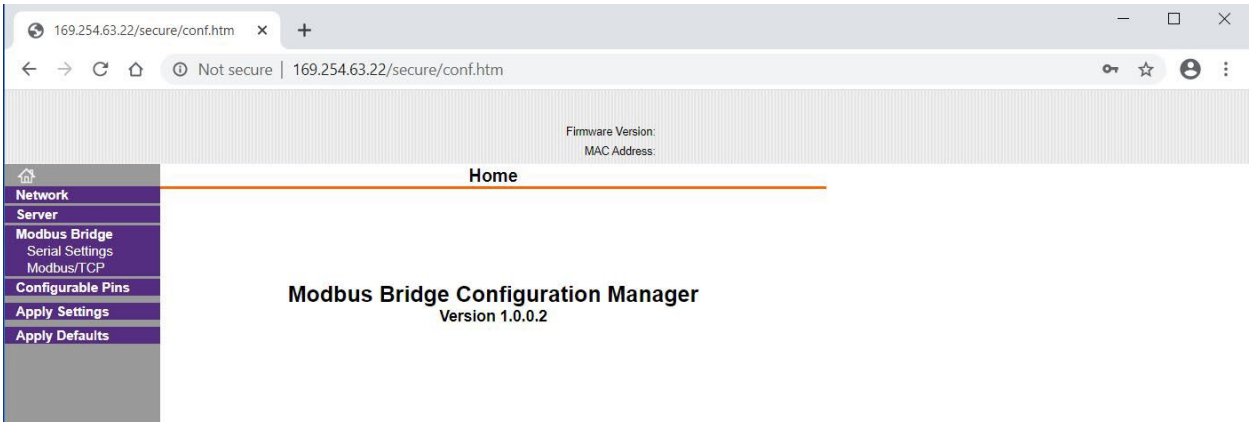

Locate “Network” in the left-hand column and click on it.

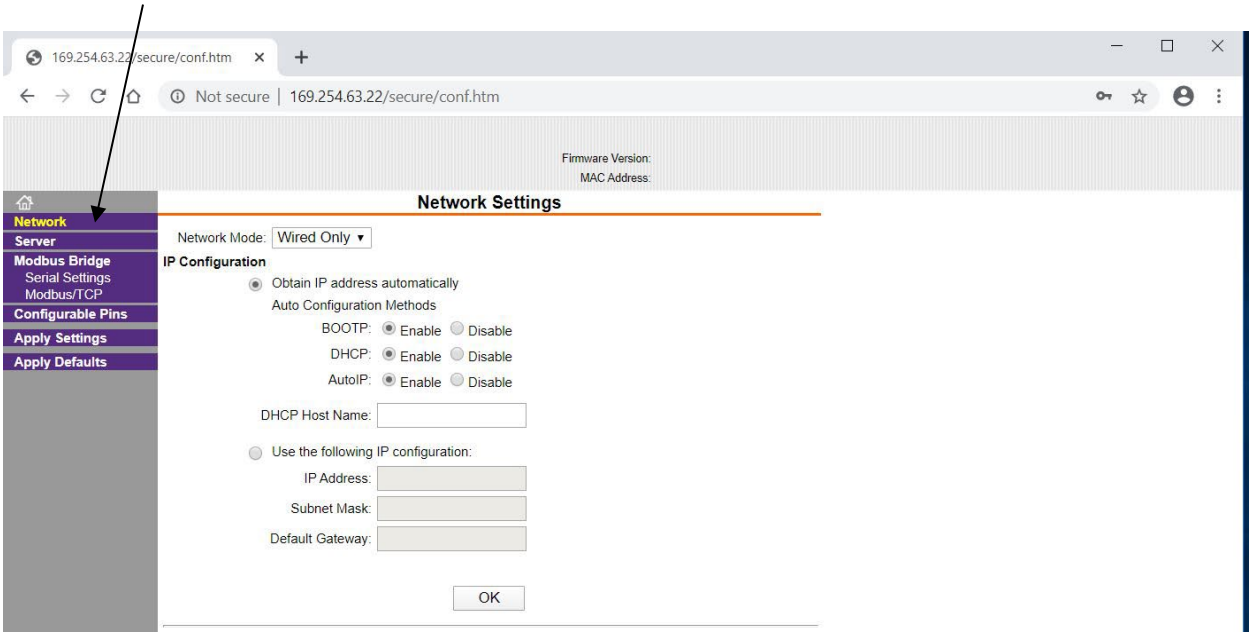

To enter a fixed IP address, click the “Use the following IP Configuration”.
Enter the desired IP address and Subnet Mask (255.255.255.0) and click “Apply Settings”.

WARNING:

VERIFY THAT THE CORRECT IP ADDRESS IS ENTERED PRIOR TO CLICKING THE “APPLY SETTINGS” BUTTON. AN INCORRECT ENTRY WILL CAUSE LOSS OF COMMUICATIONS TO THE DEVICE AND WILL BE NON RECOVERABABLE.

Setting the BAUD RATE

If BAUD RATE setting is changed in WDL-3 Setup Screen then it is necessary to set the same baud rate through Serial Setting screen. For example if BAUD RATE is set to 2, Baud rate should be set to 19200. If BAUD RATE is set to 3 then it should be set to 115200.

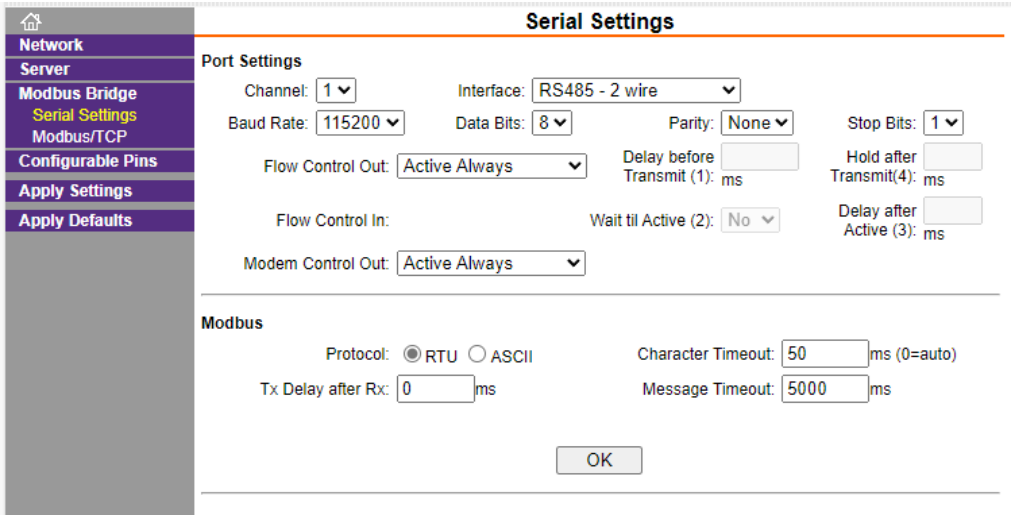

7.0 WDL-3 USB COMMUNICATIONS SETUP

Our recommended way to configure the WDL-3 USB Communications is to install the USB Driver file located on the optional ArcTrack 2 CD or USB flash drive.

If you do not have *FULL ADMINISTRATIVE PRIVILEGES* on your computer you will need to contact your company IT Professional for assistance with installing these drivers and the ARC Track II Program (the ARC Track II Program will need privileges enabled for creating file folders and read and write privileges as a minimum).

Insert the ARC Track II CD or USB flash-drive into your computer. The CD or USB flash-drive will auto-boot to the ARC Track II Installation Wizard screen. If it does not auto-boot, go to the CD or USB flash-drive using file explorer and double-click the autorun.exe file.

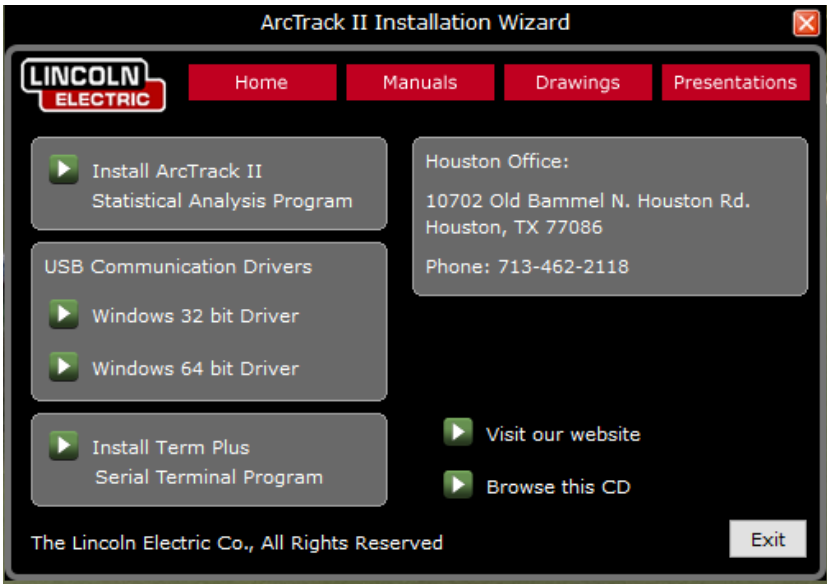

Click the correct Windows Driver for your operating system.

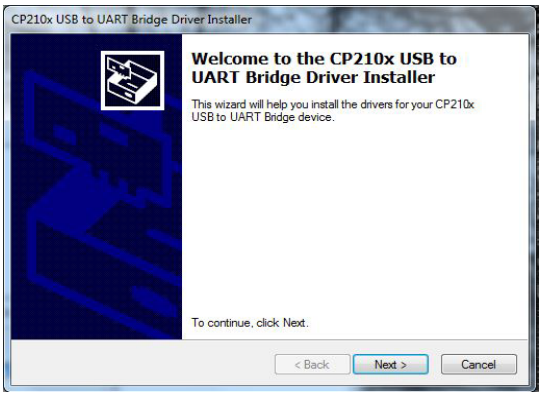

The USB Driver Installer will display. Click “Next”

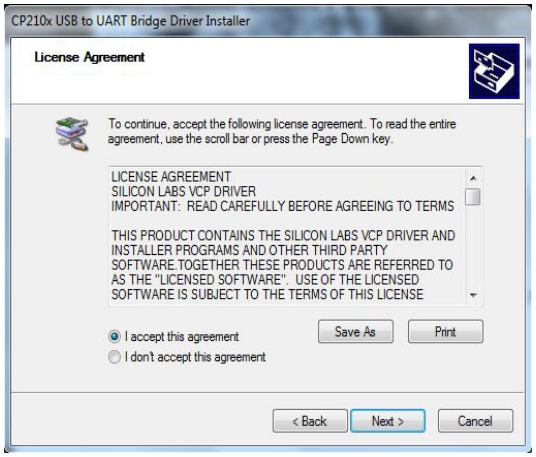

Click the “I accept the agreement” and then click “Next”

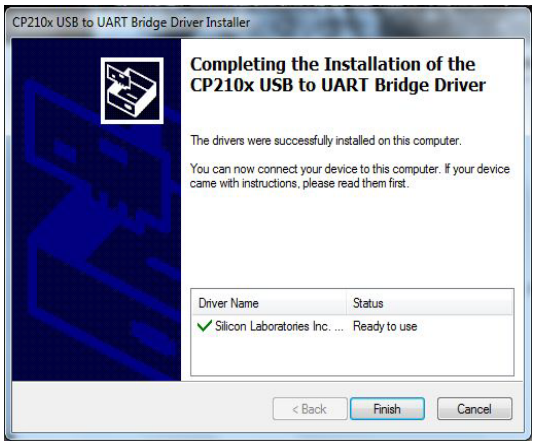

Once the Driver Installation is complete click “Finish”

Connect the WDL-3 USB cable to the computer USB port and the WDL-3 USB port. Apply Power to the WDL-3. Depending on the version of Windows you are using you should see a “Plug and Play” notification on the Computer Desktop indicating that the USB Device drive has been located.

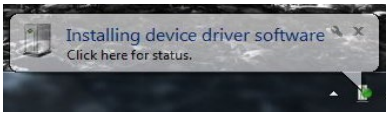

Once the driver installation is complete you will see a COM Port assignment notification. **Make note of the Com Port Number assigned to the USB device**. You will need that number to connect to the WDL-3 using the ARC Track II Program. In this example the Com Post number is 10.

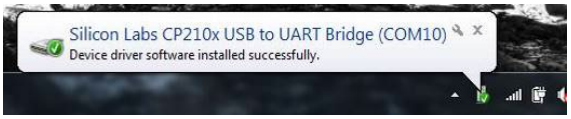

If you fail to notice the Com Port Number or wish to change the port number, open the Windows Control Panel.

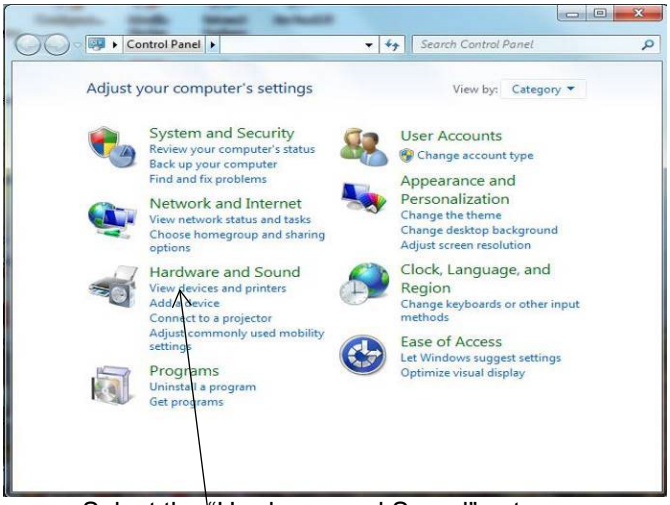

Select the “Hardware and Sound” category

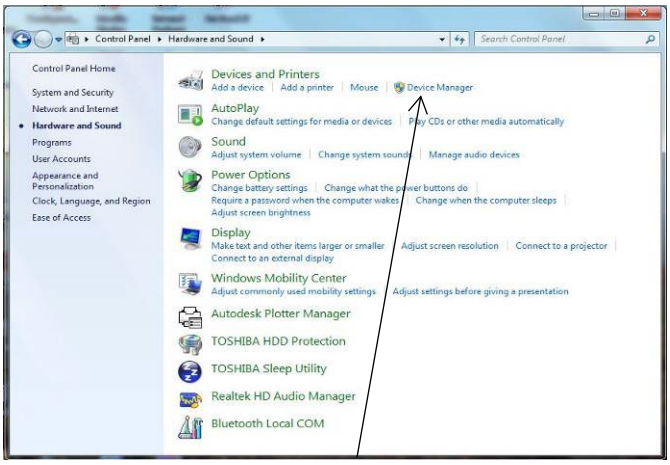

Select the “Device Manager”

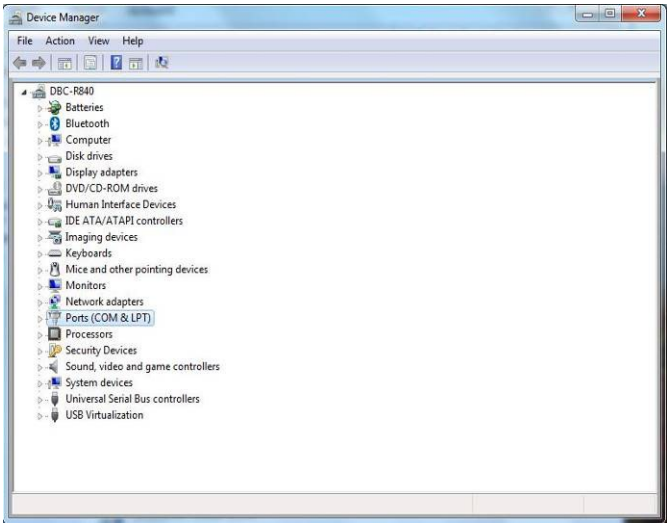

Locate the “Ports(COM&LPT) and click on it

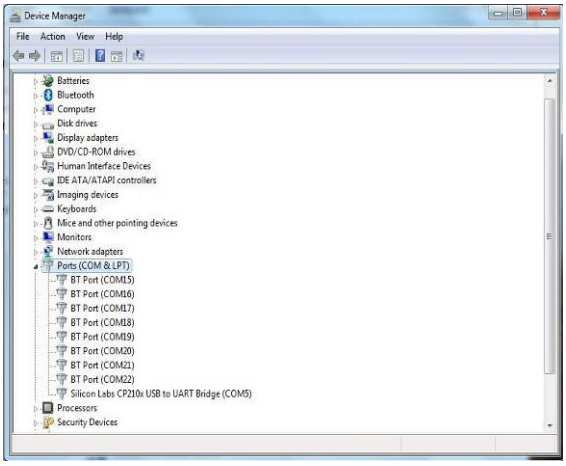

In the Port List locate the “Silicon Labs CP210x USB to UART Bridge (COMX)”. That is the assigned comport number for the USB device for use with the ArcTrack 2 Program.
If you wish to change the Port number Double Click the “Silicon Labs CP210x USB to UART Bridge (COMX)” and the Properties Window will open.

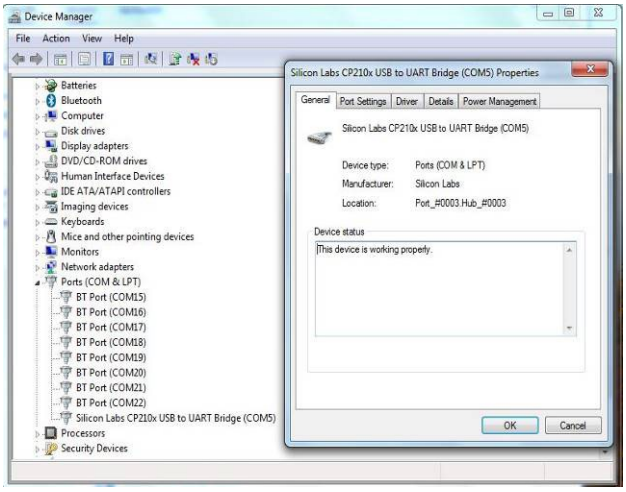

Click on the “Port Settings” Tab

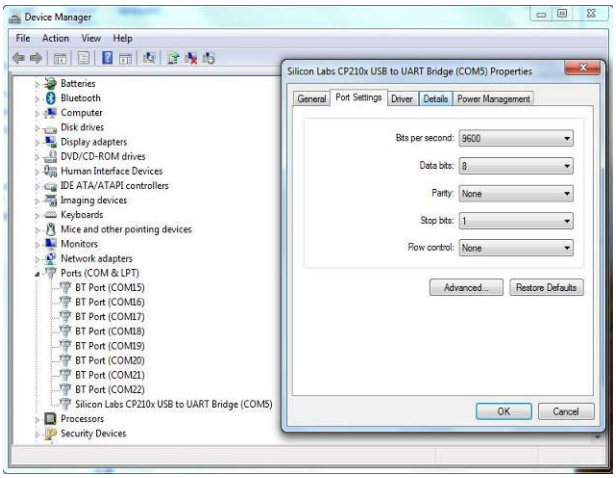

Click on “Advanced”

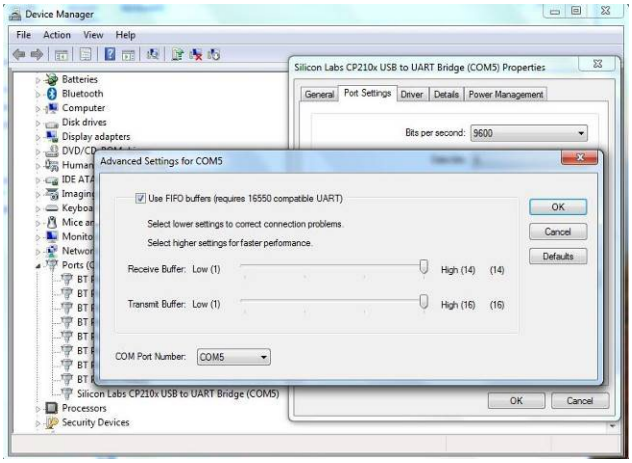

Use the “COM Port Number” pull down window to select any port not “IN USE”
Click “OK” on each window to exit and save the setting.

Open the ArcTrack 2 Program you will notice that it is “OFF LINE”

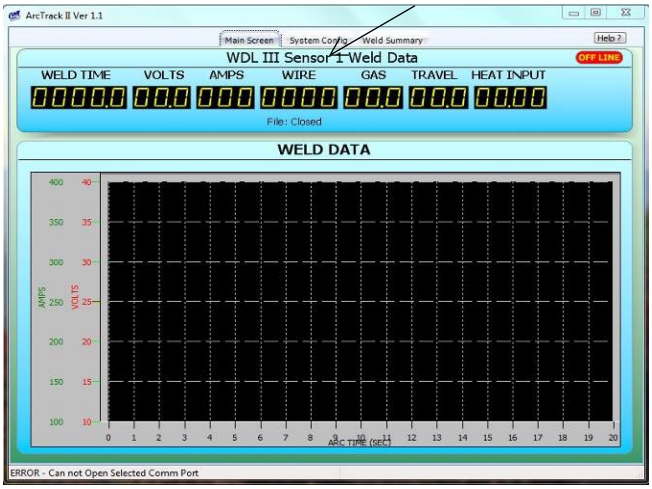

Click on the “System Config” Tab

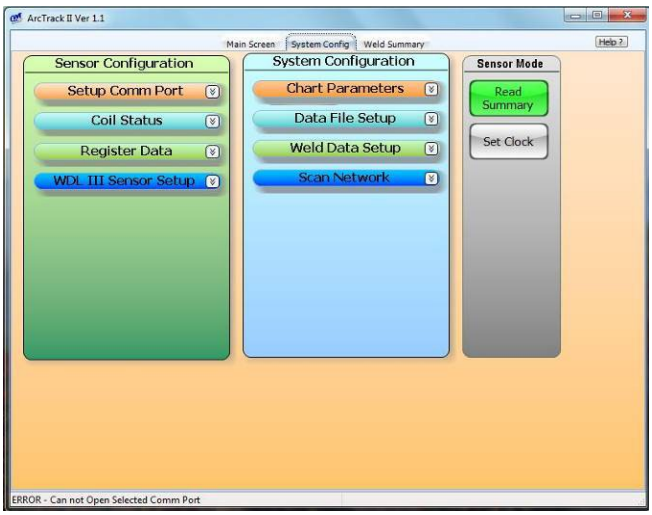

Click the “Setup Comm Port” button

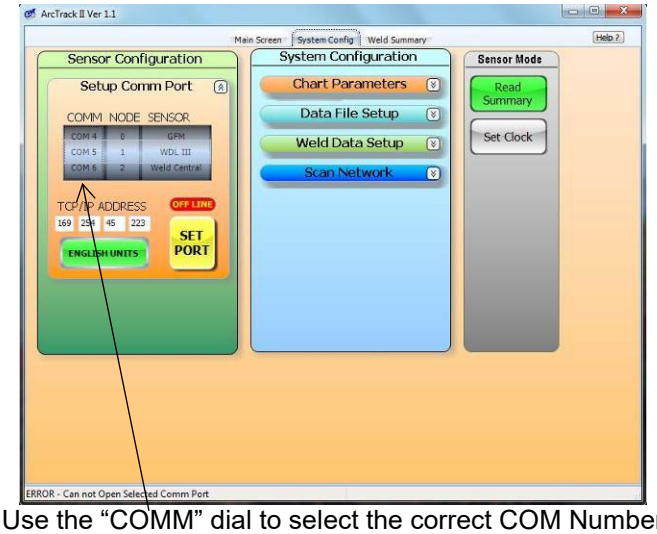

Use the “COMM” dial to select the correct COM Number
Use the “NODE” dial to set the correct Node number (default number is 1)
Use the “SENSOR” dial to select WDL III

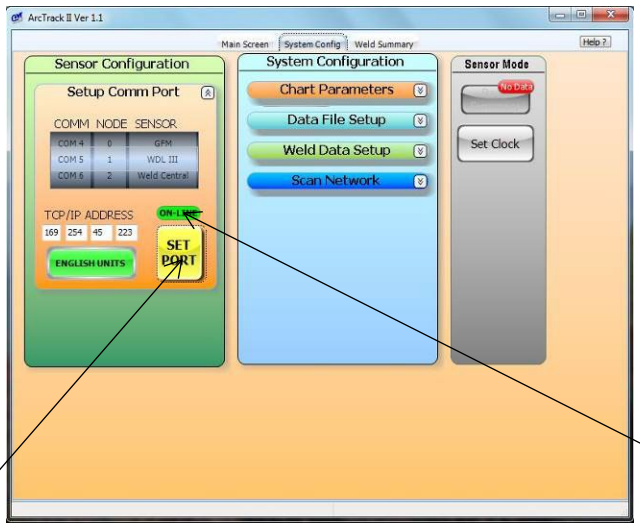

Click the “Set Port” button and the communications status should change to “ON LINE”

8.0 INSTALLATION DRAWINGS AND PARTS LISTS

8.1 WDL-3 STANDARD SYSTEM CONFIGURATIONS

There are two different standard system configurations for the WDL-3.

1. Ethernet System - P/N: A0A0171-ETH
   (Enclosure contains built-in auto-sensing 10/100 Mbps Ethernet port)

2. USB System - P/N: A0A0171-USB
   (Enclosure contains built-in USB port)

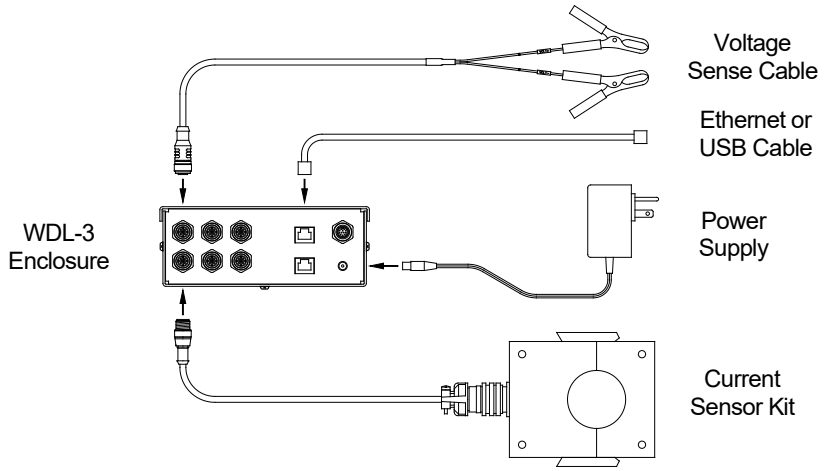

BILL OF MATERIALS FOR WDL-3 SYSTEMS

WDL-3 ETHERNET SYSTEM - P/N: A0A0171-ETH

QTY	PART NUMBER	DESCRIPTION
1	A3A0281-ETH	WDL-3 Enclosure Assembly – Ethernet Model
1	A0A0173	Clamp-On Current Sensor Kit (sensor and cable)
1	A3W0372	Voltage Sense Cable
1	A3T0003	Locking DC Power Supply
1	X3W5128	10’ CAT 5E 24awg Shielded Gray Patch Cable

WDL-3 USB SYSTEM - P/N: A0A0171-USB

QTY	PART NUMBER	DESCRIPTION
1	A3A0281-USB	WDL-3 Enclosure Assembly – USB Model
1	A0A0173	Clamp-On Current Sensor Kit (sensor and cable)
1	A3A0282	Voltage Sense Cable
1	A3T0003	Locking DC Power Supply
1	X3W5146	6’ USB 2.0 Male-A to Female-A Shielded Cable w/ Ferrites

8.2 WDL-3 SYSTEM UPGRADES

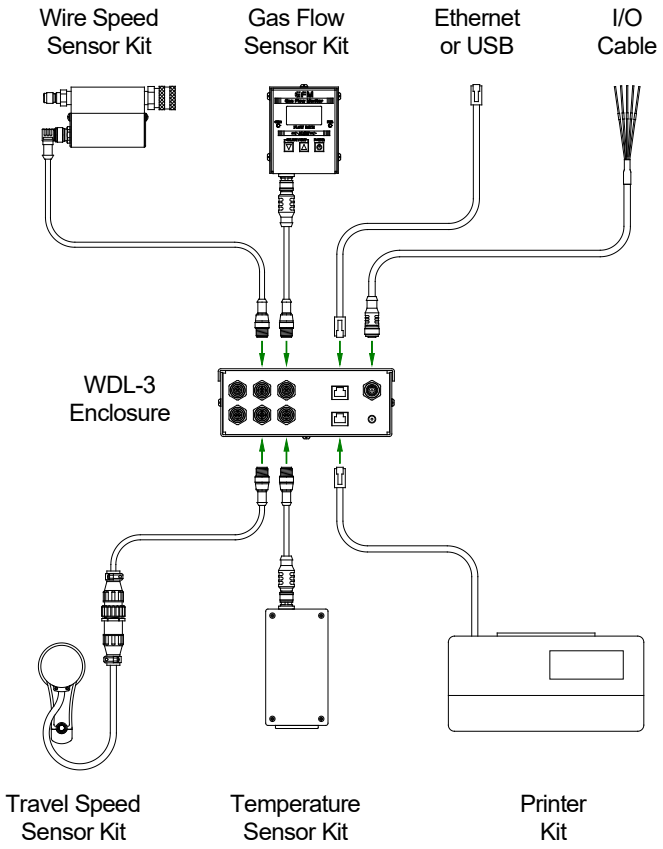

Wire Speed Sensor Kits:

1. Quick Disconnect Wire Speed Sensor Kit - P/N: A0A0179
2. Quick Disconnect Large Diameter Wire Speed Sensor Kit - P/N: A0A0180

Travel Speed Sensor Kit - P/N: A0A0182

Gas Flow Sensor Kit - P/N: A0A0183

Temperature Sensor Kits:

1. Thermocouple Type “K” Sensor Kit - P/N: A0A0184
2. Thermocouple Type “J” Sensor Kit - P/N: A0A0185
3. Thermocouple Type “T” Sensor Kit - P/N: A0A0186
4. 0-1000° F (-18 - 538° C) Infrared Sensor Kit - P/N: A0A0187

I/O Cable - P/N: A3W0380

Serial Printer Kit – P/N: A0A0188

Ethernet or USB Supplies

1. Ethernet or USB Cable (customer supplied)
2. Ethernet Crossover Cable – P/N: X3W5141

8.3 CURRENT SENSOR KIT

CLAMP-ON CURRENT SENSOR KIT - P/N: A0A0173

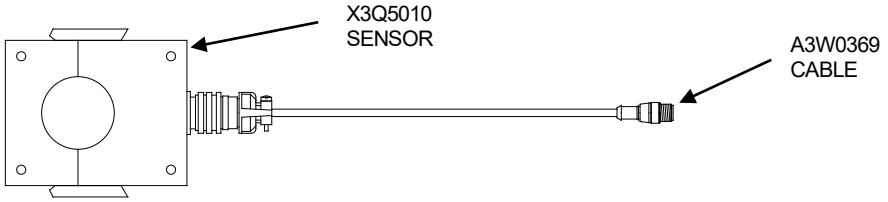

QTY	PART NUMBER	DESCRIPTION
1	X3Q5010	Current Sensor
1	A3W0369	Current Sensor Cable

CURRENT SENSOR INSTALLATION

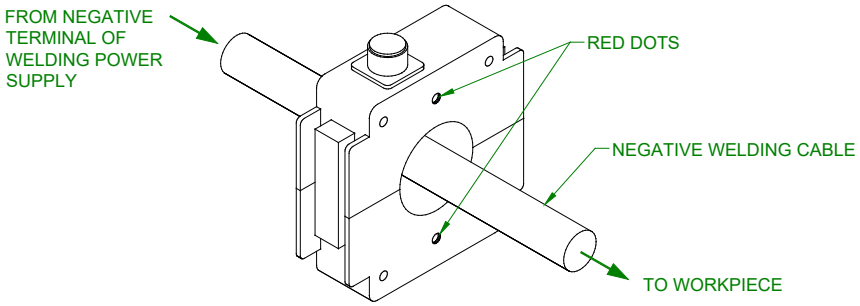

CURRENT SENSOR DIMENSIONS

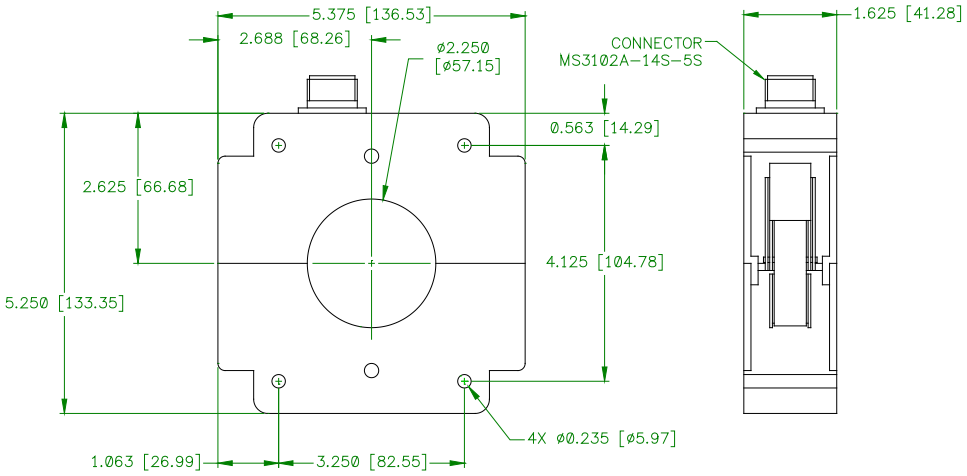

8.4 VOLTAGE SENSE CABLE

VOLTAGE SENSE CABLE - P/N: A3W0372

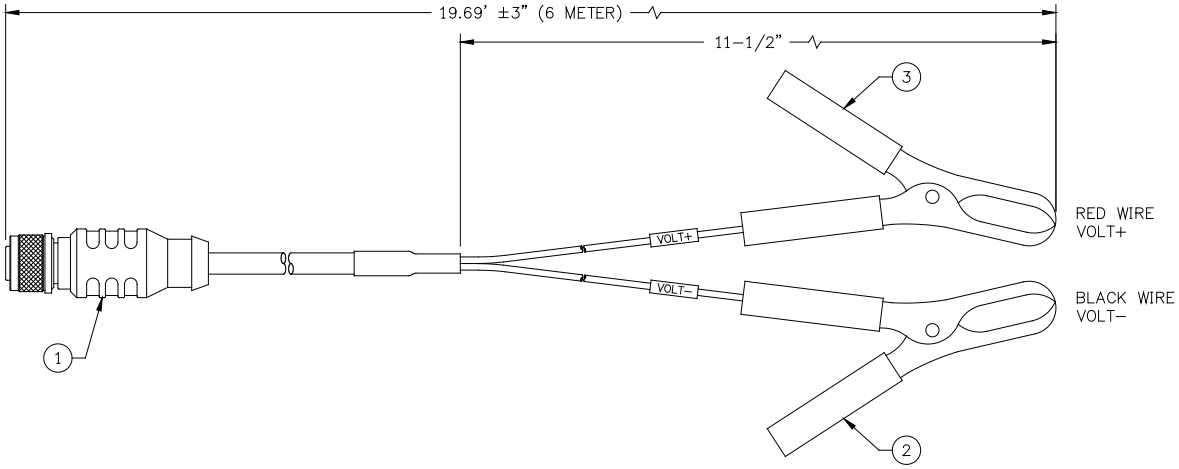

ITEM	QTY	PART NUMBER	DESCRIPTION
1	1	X3W5114	Cable, M12 4 Conductor Female Straight Single Ended
2	1	X3P5067	Clamp, Pigmy Black
3	1	X3P5068	Clamp, Pigmy Red

WIRE COLOR	PIN NUMBER	DESCRIPTION
Brown	1	+Volt
White	2	Not Used
Blue	3	-Volt
Black	4	Not Used

8.5 WIRE SPEED SENSOR KITS

QUICK DISCONNECT WIRE SPEED SENSOR KIT - P/N: A0A0179

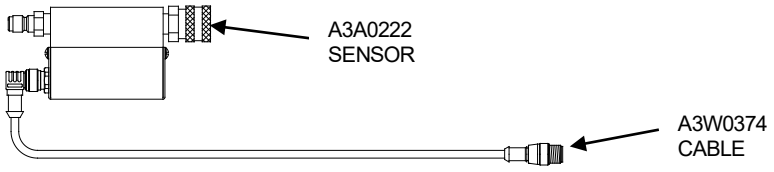

QTY	PART NUMBER	DESCRIPTION
1	A3A0222	Large Diameter Wire Speed Sensor
1	A3W0374	Wire Speed Sensor Cable

QUICK DISCONNECT LARGE DIAMETER WIRE SPEED SENSOR KIT - P/N: A0A0180

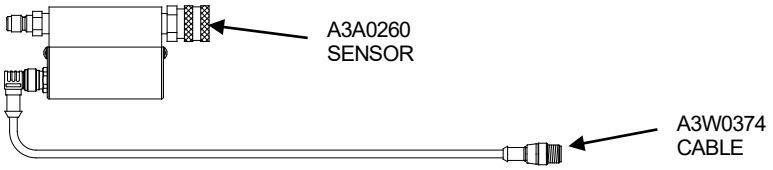

QTY	PART NUMBER	DESCRIPTION
1	A3A0260	Large Diameter Wire Speed Sensor
1	A3W0374	Wire Speed Sensor Cable

DIMENSIONS FOR QUICK DISCONNECT SENSORS P/N: A3A0222 & A3A0260

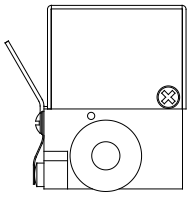

OUTPUT SIDE PANEL VIEW

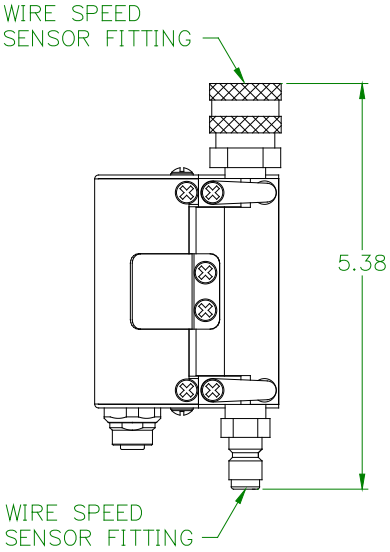

LEFT END VIEW

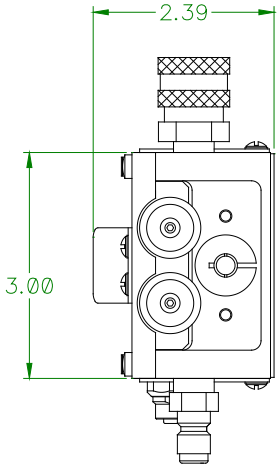

TOP VIEW

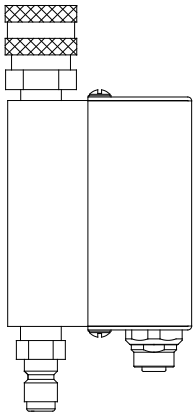

RIGHT END VIEW

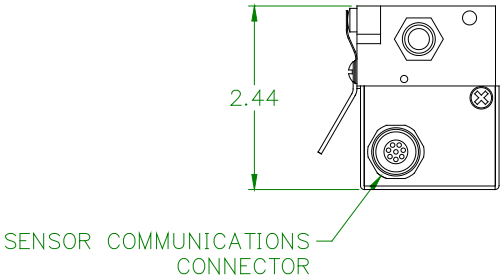

INPUT SIDE PANEL VIEW

EXPLODED VIEW FOR QUICK DISCONNECT SENSORS P/N: A3A0222

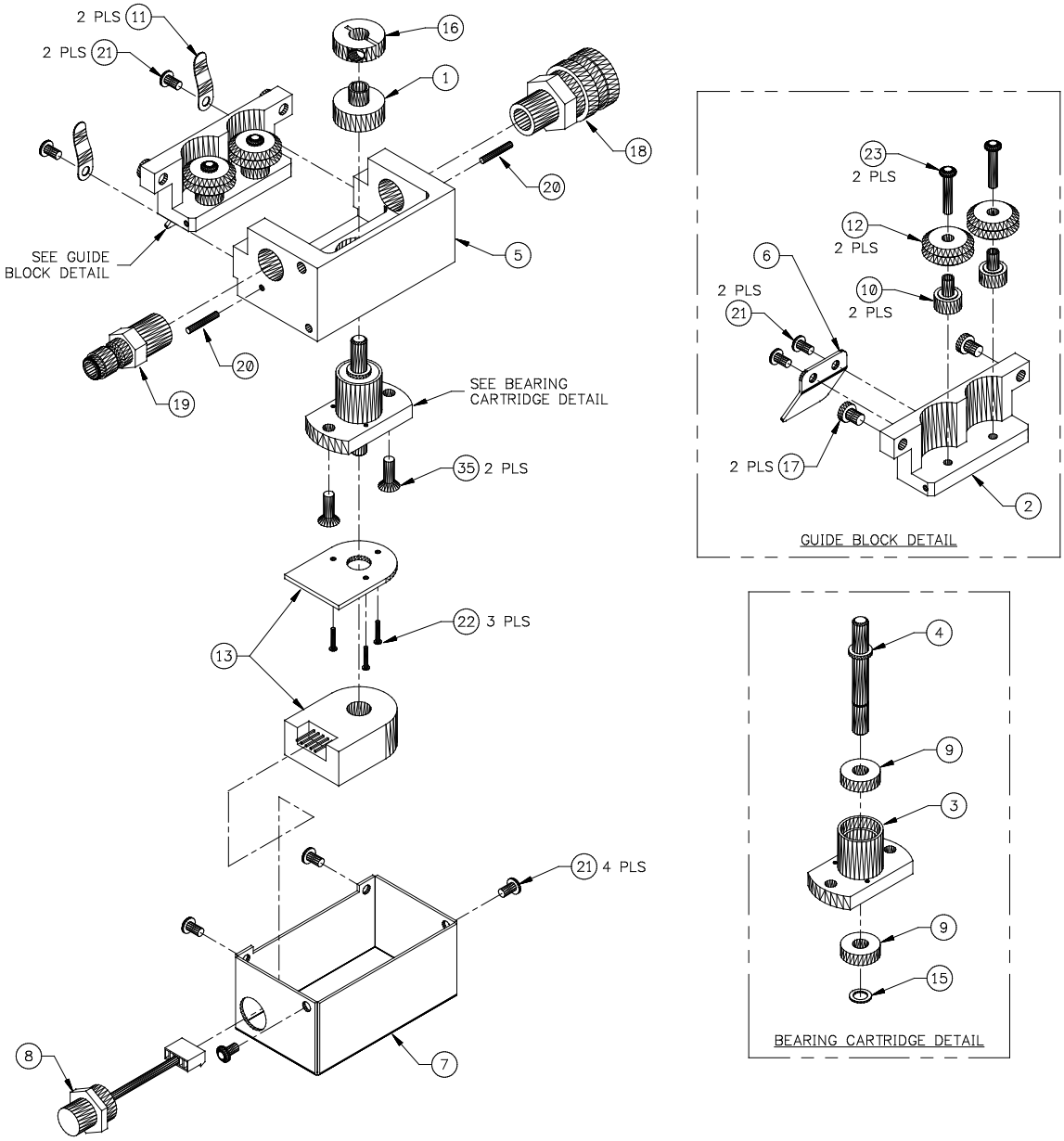

ITEM	QTY	PART NUMBER	DESCRIPTION
1	1	A2A0014	Driven Wheel Assembly
2	1	A2M0203	Guide Block
3	1	A2M0204	Bearing Cartridge
4	1	A2M0205	WFS Shaft
5	1	A2M0206	WFS Transducer Block
6	1	A3E0141	Guide Handle
7	1	A3E0145	Cover
8	1	A3W0331	Wire Harness
9	2	X2B5070	Bearing
10	2	X2B5002	Stationary Bushing
11	2	X2N5023	Flat Spring
12	2	X2P5004	Wheel
13	1	X3M5044	Encoder
14	-		
15	1	X6B5025	Retaining Ring
16	1	X6B5054	Shaft Collar
17	2	X6B5055	Locator Button
18	1	X6F5090	Fitting, Quick Disconnect
19	1	X6F5102	Fitting, Nipple
20	2	X6P5007	Dowel Pin
21	8		#6-32 X 5/16” Pan Head Screw W/ Internal Lock Washer
22			#0-80 X 3/8” Philips Pan Head Screw
23			#6-32 X 3/4" Socket Button Head Screw
24			#8-32 X 1/2" Socket Flat Head Screw

EXPLODED VIEW FOR QUICK DISCONNECT SENSORS P/N: A3A0260

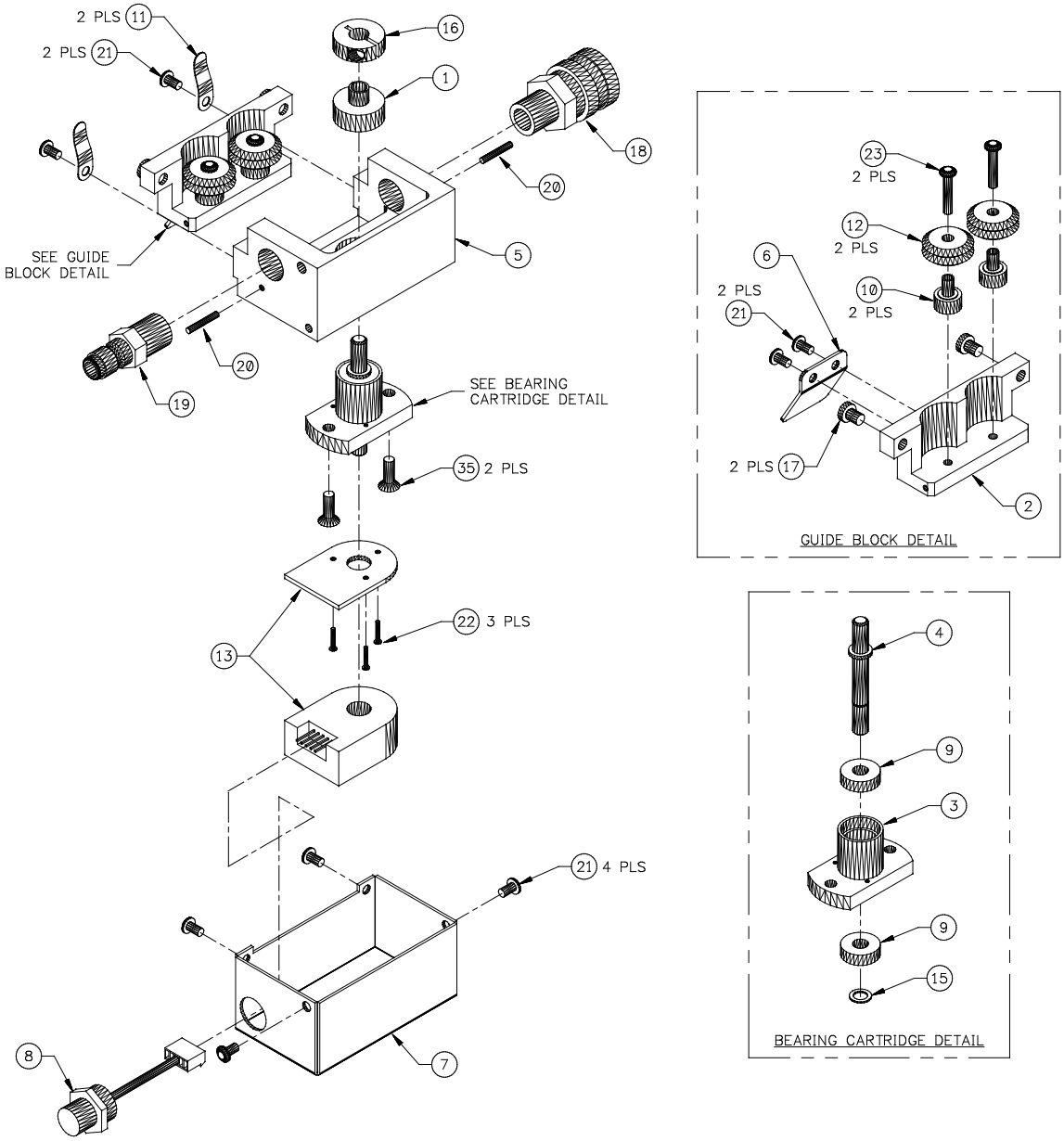

ITEM	QTY	PART NUMBER	DESCRIPTION
1	1	A2A0014	Driven Wheel Assembly
2	1	A2M0211	Guide Block
3	1	A2M0204	Bearing Cartridge
4	1	A2M0205	WFS Shaft
5	1	A2M0206	WFS Transducer Block
6	1	A3E0141	Guide Handle
7	1	A3E0145	Cover
8	1	A3W0331	Wire Harness
9	2	X2B5070	Bearing
10	2	X2B5002	Stationary Bushing
11	2	X2N5023	Flat Spring
12	2	X2P5004	Wheel
13	1	X3M5044	Encoder
14	-		
15	1	X6B5025	Retaining Ring
16	1	X6B5054	Shaft Collar
17	2	X6B5055	Locator Button
18	1	X6F5090	Fitting, Quick Disconnect
19	1	X6F5102	Fitting, Nipple
20	2	X6P5007	Dowel Pin
21	8		#6-32 X 5/16” Pan Head Screw W/ Internal Lock Washer
22			#0-80 X 3/8” Philips Pan Head Screw
23			#6-32 X 3/4" Socket Button Head Screw
24			#8-32 X 1/2" Socket Flat Head Screw

8.6 TRAVEL SPEED SENSOR KIT

TRU-TRAC TRAVEL SPEED SENSOR KIT - P/N: A0A0182

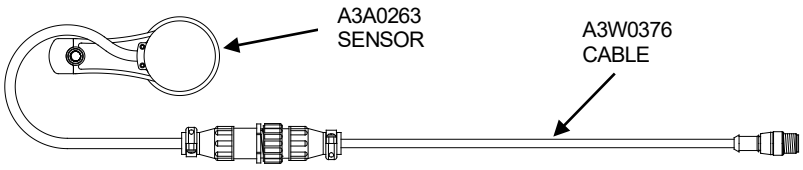

QTY	PART NUMBER	DESCRIPTION
1	A3A0263	Tru-Trac Travel Speed Sensor
1	A3W0376	Travel Speed Sensor Cable

TRAVEL SPEED SENSOR DIMENSIONS

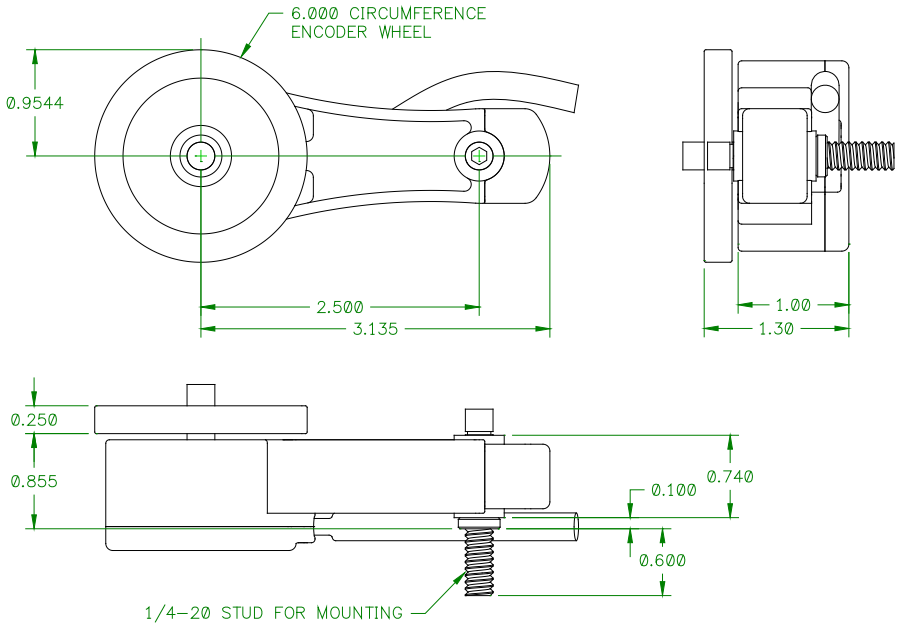

DIMENSIONS FOR THE TRU-TRAC TRAVEL SPEED SENSOR MOUNTING BRACKET

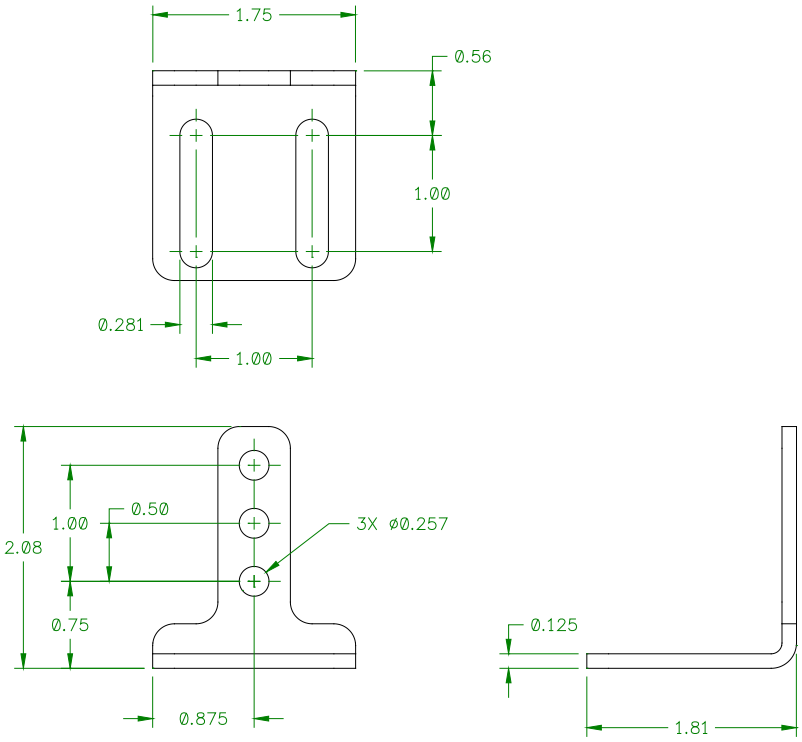

8.7 GAS FLOW SENSOR KIT

GAS FLOW SENSOR KIT - P/N: A0A0183

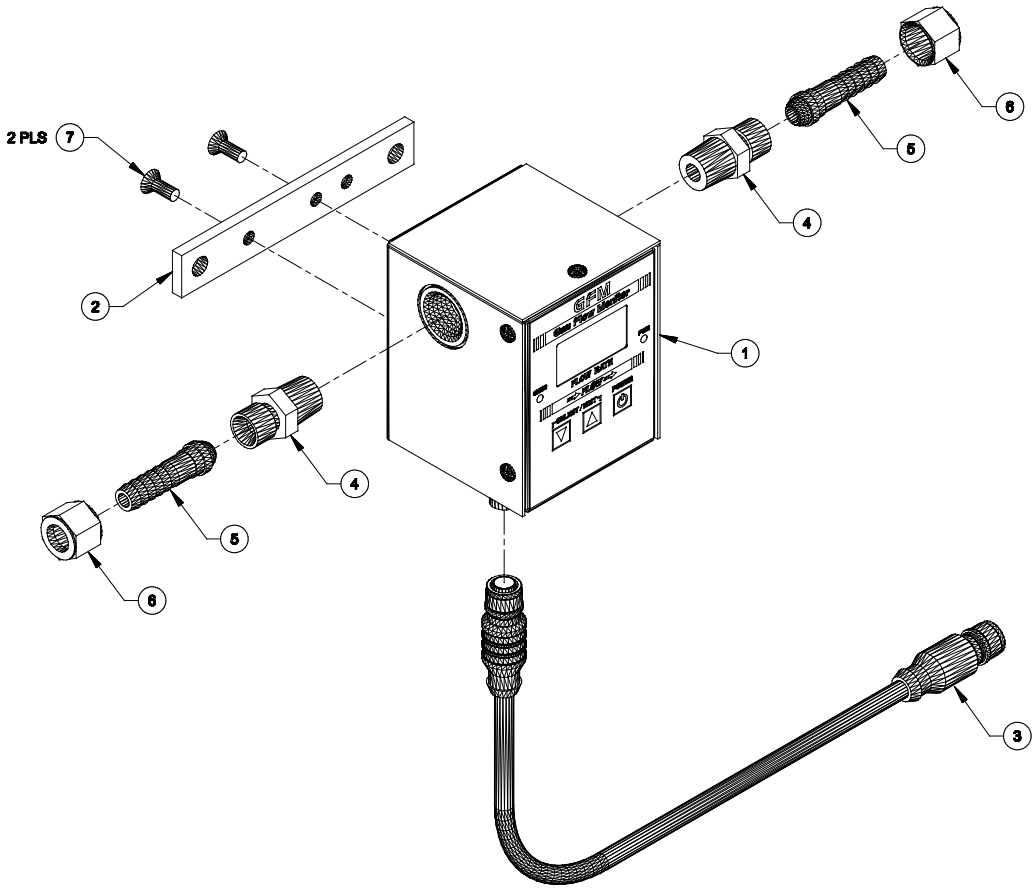

ITEM	QTY	PART NUMBER	DESCRIPTION
1	1	A3A0277	GFM – GAS FLOW MONITOR
2	1	A3E0222	MOUNTING BAR
3	1	A3W0377	GAS FLOW MONITOR CABLE
4	2	X6F5093	ADAPTOR FITTING
5	2	X6F5094	BARB FITTING
6	2	X6F5095	“B” SIZE NUT
7	2		#10-32 X 1/2" LG. SOCKET FLAT HD. SCREW

GAS FLOW SENSOR DIMENSIONS

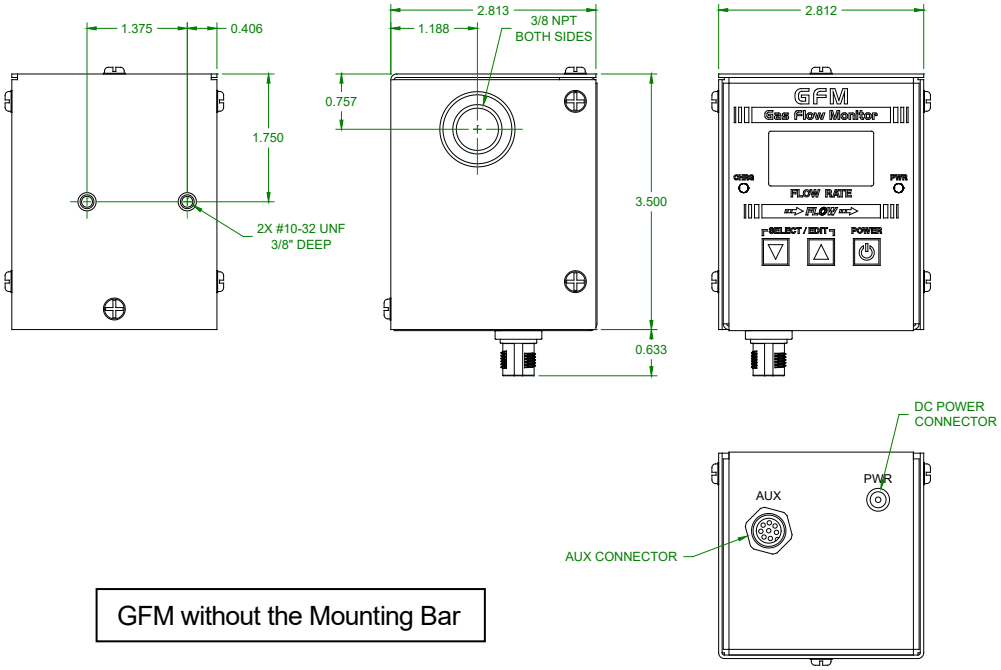

GFM without the Mounting Bar

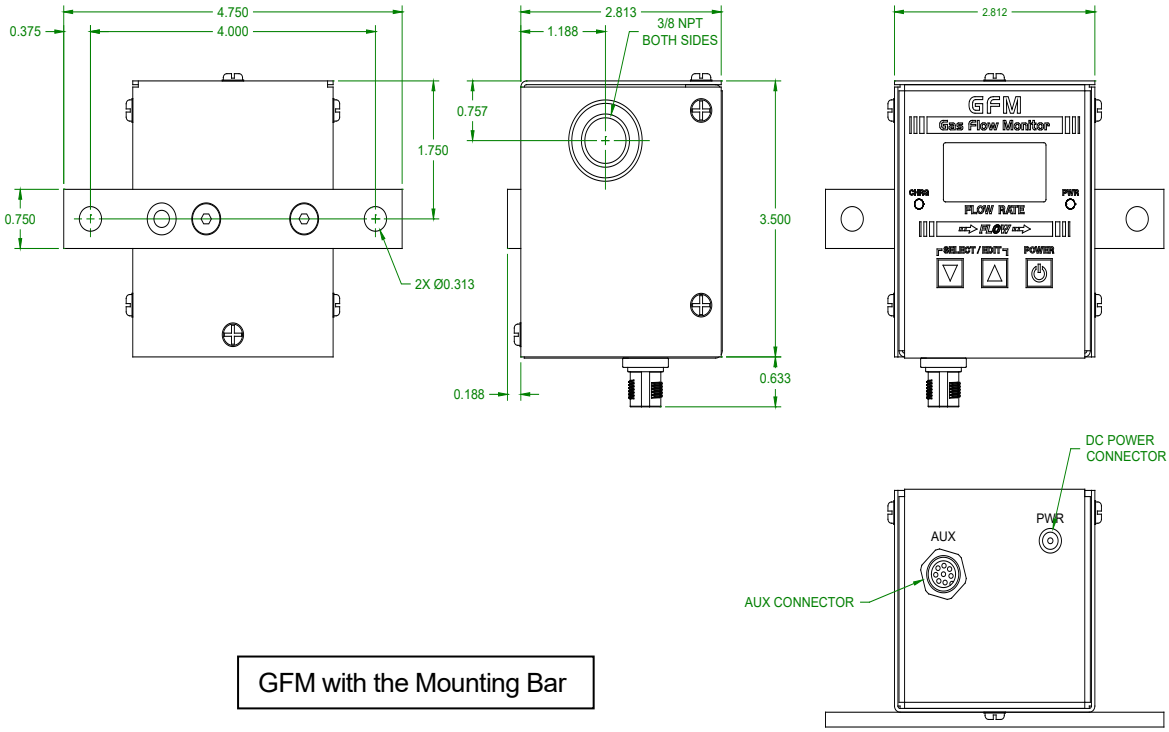

GFM with the Mounting Bar

8.8 TEMPERATURE SENSOR KITS

THERMOCOUPLE TYPE “K” SENSOR KIT - P/N: A0A0184

QTY	PART NUMBER	DESCRIPTION
1	A3A0285	Thermocouple Type “K” Sensor Box
1	A3W0378	Thermocouple Cable

THERMOCOUPLE TYPE “J” SENSOR KIT - P/N: A0A0185

QTY	PART NUMBER	DESCRIPTION
1	A3A0286	Thermocouple Type “J” Sensor Box
1	A3W0378	Thermocouple Cable

THERMOCOUPLE TYPE “T” SENSOR KIT - P/N: A0A0186

QTY	PART NUMBER	DESCRIPTION
1	A3A0287	Thermocouple Type “T” Sensor Box
1	A3W0378	Thermocouple Cable

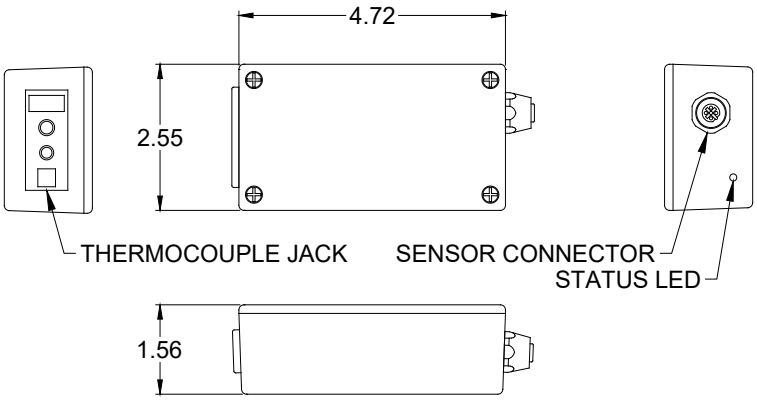

THERMOCOUPLE SENSOR DIMENSIONS

0-1000° F (-18 - 538° C) INFRARED SENSOR KIT - P/N: A0A0187

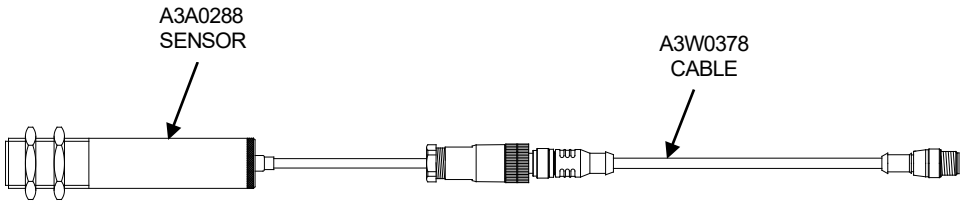

QTY	PART NUMBER	DESCRIPTION
1	A3A0288	0-1000° F Infrared Sensor
1	A3W0378	Infrared Cable

INFRARED SENSOR DIMENSIONS

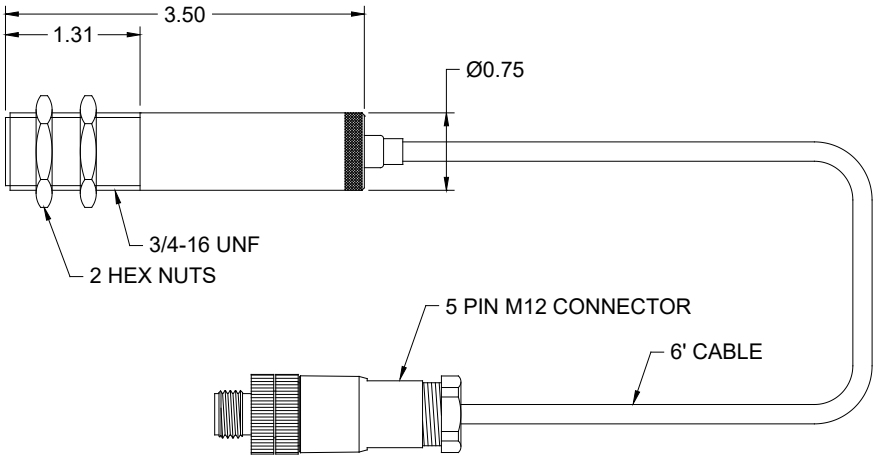

8.9 I/O CABLE

I/O CABLE - P/N: A3W0380

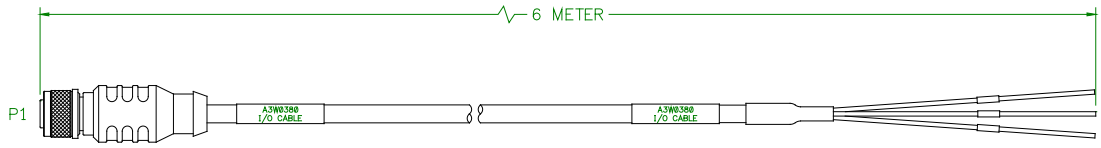

WIRE COLOR	PIN NUMBER	DESCRIPTION
WHITE	1	INP1
BROWN	2	INP2
GREEN	3	INP3
YELLOW	4	INP COM
GRAY	5	CR1
PINK	6	CR2
BLUE	7	CR3
RED	8	OUT COM

8.10 SERIAL PRINTER KIT

SERIAL PRINTER KIT - P/N: A0A0188

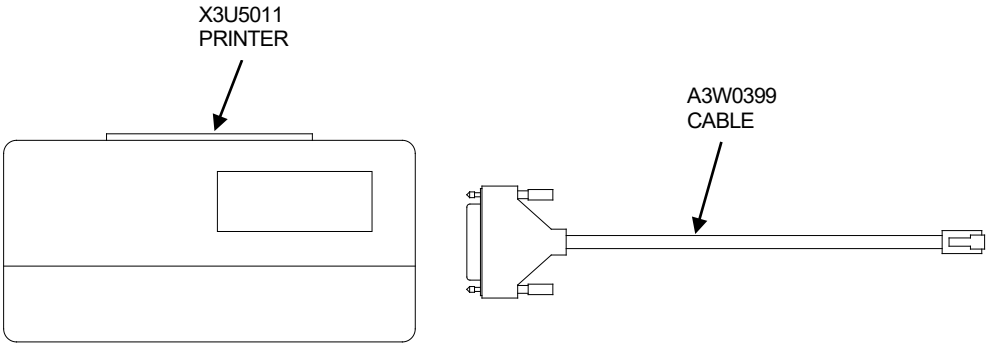

QTY	PART NUMBER	DESCRIPTION
1	X3U5011	Serial Printer
1	A3W0399	Serial Printer Cable

3” WIDE PRINTER PAPER - P/N: X3U5010

8.11 ETHERNET CONFIGURATIONS

DIRECT PC CONNECTION

Contact Computer Weld Technology (www.support@cweldtech.com) for Direct Connect PC to WDL-3 instructions.

ROUTER OR SWITCHER CONNECTION

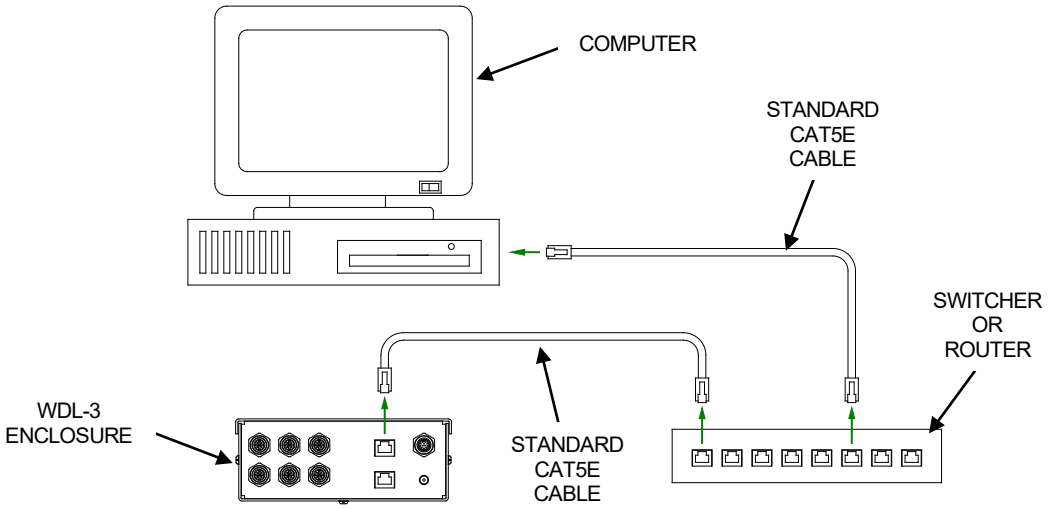

8.12 HIGH FREQUENCY ISOLATION KIT

Voltage Isolation Sensor – P/N: A3A0282

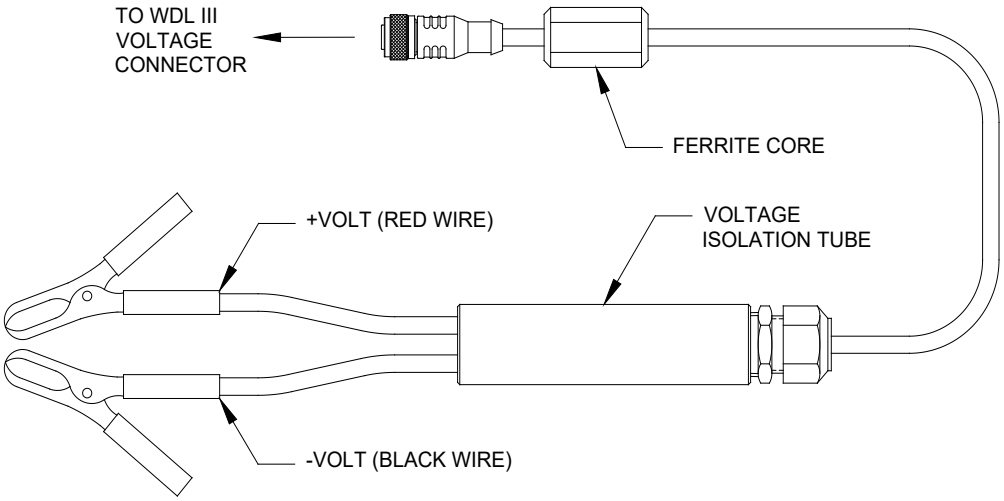

The rest of the kit includes ferrite beads for sensor and printer cable.

APPENDIX

Terms and Definitions

GLOSSARY

A

ADC – AMPS Direct Current

ARP - Address Resolution Protocol (ARP) is a telecommunication protocol used for resolution of network layer addresses into link layer addresses, a critical function in multiple-access networks.

ASCII - American Standard Code for Information Interchange is a character encoding. ASCII codes represent text in computers, telecommunications equipment, and other devices.

AUTO IP - Automatic Private IP Addressing or Auto IP is a method of automatically assigning IP addresses to networked computers and printers.

B

BCD FORMAT – **binary-coded decimal** (**BCD**) is a class of binary encodings of decimal numbers where each decimal digit is represented by a fixed number of bits, usually four or eight.

BOOTP - Bootstrap Protocol (BOOTP) is a computer networking protocol used in Internet Protocol networks to automatically assign an IP address to network devices from a configuration server.

C

CFH – Cubic Feet Per-Hour

D

DEC - Decrement

DEVICE ID – An individual station identification number ranging from 1 to 247 used in Modbus Communications Protocol.

DHCP - Dynamic Host Configuration Protocol (DHCP) is a standardized network protocol used on Internet Protocol (IP) networks for dynamically distributing network configuration parameters, such as IP addresses for interfaces and services.

G

GFM – Gas Flow Monitor

GTAW – Gas Tungsten ARC Welding

H

HALL-EFFECT - **Hall Effect** is the production of a voltage difference (the **Hall voltage**) across an electrical conductor, transverse to an electric current in the conductor and a magnetic field perpendicular to the current.

HTTP - Hypertext Transfer Protocol (HTTP) is an application protocol for distributed, collaborative, hypermedia information systems.

I

INC - Increment

IPM – Inches Per-Minute (IPM) A unit of measurement for distance moved in inches in one minute.

L

LED - **light-emitting diode** (**LED**) is a two-lead semiconductor light source.

LPM – Liters Per-Minute

LSB - **least significant bit** (**LSB**) is the bit position in a binary integer giving the units value, that is, determining whether the number is even or odd. The LSB is sometimes referred to as the *right-most bit*, due to the convention in positional notation of writing less significant digits further to the right. It is analogous to the least significant digit of a decimal integer, which is the digit in the *ones* (right-most) position.

M

MAX – Maximum

MIN - Minimum

MM/S - Millimeters Per-Second (mm/s) A unit of measurement for distance in millimeters moved in one second.

MODBUS/IP – Modbus/IP - is a Modbus variant used for MODBUS communications over TCP/IP networks, connecting over port 502.

MODBUS RTU - Modbus RTU - is used for serial communication & makes use of a compact, binary representation of the data for protocol communication.

MSB - **most significant bit** (**MSB**, also called the **high-order bit**) is the bit position in a binary number having the greatest value. The MSB is sometimes referred to as the **left-most bit** due to the convention in positional notation of writing more significant digits further to the left.

O

OLED - **organic light-emitting diode** (**OLED**) is a light-emitting diode (LED) in which the emissive electroluminescent layer is a film of organic compound that emits light in response to an electric current.

P

PAW – Plasma ARC Welding

PCB – Printed Circuit Board

PGM - Program

PSI – Pounds Per Square Inch

R

RTC – Real Time Clock

S

SMTP - **Simple Mail Transfer Protocol** (**SMTP**) is an Internet standard for electronic mail (email) transmission

SNMP - **Simple Network Management Protocol** (**SNMP**) is an Internet-standard protocol for collecting and organizing information about managed devices on IP networks and for modifying that information to change device behavior.

SSR – Solid State Relay

T

TCP/IP - Transmission Control Protocol (TCP)/ Internet Protocol (IP) provides end-to-end data communication specifying how data should be packetized, addressed, transmitted, routed and received over the Internet.

TELNET - **Telnet** is an application layer protocol used on the Internet or local area networks to provide a bidirectional interactive text-oriented communication facility using a virtual terminal connection.

TFTP - **Trivial File Transfer Protocol** (**TFTP**) is a simple, lockstep, File Transfer Protocol which allows a client to get from or put a file onto a remote host.

TRANSDUCER - converts linear or rotary position to an electronic signal.

U

UDP/IP - User Datagram Protocol (UDP)/Internet Protocol (IP) is one of the core members of the Internet protocol suite which provides a simple connectionless transmission model with a minimum of protocol mechanism.

V

VDC – Volts Direct Current

WARNING	● Do not touch electrically live parts or electrode with skin or wet clothing. ● Insulate yourself from work and ground.	● Keep flammable materials away.	● Wear eye, ear and body protection.
Spanish **AVISO DE PRECAUCION**	● No toque las partes o los electrodos bajo carga con la piel o ropa mojada. ● Aislese del trabajo y de la tierra.	● Mantenga el material combustible fuera del área de trabajo.	● Protéjase los ojos, los oídos y el cuerpo.
French **ATTENTION**	● Ne laissez ni la peau ni des vêtements mouillés entrer en contact avec des pièces sous tension. ● Isolez-vous du travail et de la terre.	● Gardez à l'écart de tout matériel inflammable.	● Protégez vos yeux, vos oreilles et votre corps.
German **WARNUNG**	● Berühren Sie keine stromführenden Teile oder Elektroden mit Ihrem Körper oder feuchter Kleidung! ● Isolieren Sie sich von den Elektroden und dem Erdboden!	● Entfernen Sie brennbarres Material!	● Tragen Sie Augen-, Ohren- und Körperschutz!
Portuguese **ATENÇÃO**	● Não toque partes elétricas e electrodos com a pele ou roupa molhada. ● Isole-se da peça e terra.	● Mantenha inflamáveis bem guardados.	● Use proteção para a vista, ouvido e corpo.
Japanese **注意事項**	● 通電中の電気部品、又は溶材にヒフやぬれた布で触れないこと。 ● 施工物やアースから身体が絶縁されている様にして下さい。	● 燃えやすいものの側での溶接作業は絶対にしてはなりません。	● 目、耳及び身体に保護具をして下さい。
Chinese **警 告**	● 皮肤或濕衣物切勿接觸帶電部件及銲條。 ● 使你自己與地面和工件絶緣。	● 把一切易燃物品移離工作場所。	● 佩戴眼、耳及身體勞動保護用具。
Korean **위 험**	● 전도체나 용접봉을 젖은 헝겁 또는 피부로 절대 접촉치 마십시요. ● 모재와 접지를 접촉치 마십시요.	● 인화성 물질을 접근 시키지 마시요.	● 눈, 귀와 몸에 보호장구를 착용하십시요.
Arabic **تحذير**	● لا تلمس الاجزاء التي يسري فيها التيار الكهربائي أو الالكترود بجلد الجسم أو بالملابس المبللة بالماء. ● ضع عازلا على جسمك خلال العمل.	● ضع المواد القابلة للاشتعال في مكان بعيد.	● ضع أدوات وملابس واقية على عينيك وأذنيك وجسمك.

READ AND UNDERSTAND THE MANUFACTURER'S INSTRUCTION FOR THIS EQUIPMENT AND THE CONSUMABLES TO BE USED AND FOLLOW YOUR EMPLOYER'S SAFETY PRACTICES.

SE RECOMIENDA LEER Y ENTENDER LAS INSTRUCCIONES DEL FABRICANTE PARA EL USO DE ESTE EQUIPO Y LOS CONSUMIBLES QUE VA A UTILIZAR, SIGA LAS MEDIDAS DE SEGURIDAD DE SU SUPERVISOR.

LISEZ ET COMPRENEZ LES INSTRUCTIONS DU FABRICANT EN CE QUI REGARDE CET EQUIPMENT ET LES PRODUITS A ETRE EMPLOYES ET SUIVEZ LES PROCEDURES DE SECURITE DE VOTRE EMPLOYEUR.

LESEN SIE UND BEFOLGEN SIE DIE BETRIEBSANLEITUNG DER ANLAGE UND DEN ELEKTRODENEINSATZ DES HERSTELLERS. DIE UNFALLVERHÜTUNGSVORSCHRIFTEN DES ARBEITGEBERS SIND EBENFALLS ZU BEACHTEN.

● Keep your head out of fumes. ● Use ventilation or exhaust to remove fumes from breathing zone.	● Turn power off before servicing.	● Do not operate with panel open or guards off.	**WARNING**
● Los humos fuera de la zona de respiración. ● Mantenga la cabeza fuera de los humos. Utilice ventilación o aspiración para gases.	● Desconectar el cable de alimentación de poder de la máquina antes de iniciar cualquier servicio.	● No operar con panel abierto o guardas quitadas.	Spanish **AVISO DE PRECAUCION**
● Gardez la tête à l'écart des fumées. ● Utilisez un ventilateur ou un aspirateur pour ôter les fumées des zones de travail.	● Débranchez le courant avant l'entretien.	● N'opérez pas avec les panneaux ouverts ou avec les dispositifs de protection enlevés.	French **ATTENTION**
● Vermeiden Sie das Einatmen von Schweibrauch! ● Sorgen Sie für gute Be- und Entlüftung des Arbeitsplatzes!	● Strom vor Wartungsarbeiten abschalten! (Netzstrom völlig öffnen; Maschine anhalten!)	● Anlage nie ohne Schutzgehäuse oder Innenschutzverkleidung in Betrieb setzen!	German **WARNUNG**
● Mantenha seu rosto da fumaça. ● Use ventilação e exhaustão para remover fumo da zona respiratória.	● Não opere com as tampas removidas. ● Desligue a corrente antes de fazer serviço. ● Não toque as partes elétricas nuas.	● Mantenha-se afastado das partes moventes. ● Não opere com os paineis abertos ou guardas removidas.	Portuguese **ATENÇÃO**
● ヒュームから頭を離すようにして下さい。 ● 換気や排煙に十分留意して下さい。	● メンテナンス・サービスに取りかかる際には、まず電源スイッチを必ず切って下さい。	● パネルやカバーを取り外したままで機械操作をしないで下さい。	Japanese **注意事項**
● 頭部遠離煙霧。 ● 在呼吸區使用通風或排風器除煙。	● 維修前切斷電源。	● 儀表板打開或沒有安全罩時不準作業。	Chinese **警 告**
● 얼굴로부터 용접가스를 멀리하십시요. ● 호흡지역으로부터 용접가스를 제거하기 위해 가스제거기나 통풍기를 사용하십시요.	● 보수전에 전원을 차단하십시요.	● 판넬이 열린 상태로 작동치 마십시요.	Korean **위 험**
● ابعد رأسك بعيداً عن الدخان. ● استعمل التهوية أو جهاز ضغط الدخان للخارج لكي تبعد الدخان عن المنطقة التي تتنفس فيها.	● اقطع التيار الكهربائي قبل القيام بأية صيانة.	● لا تشغل هذا الجهاز اذا كانت الاغطية الحديدية الواقية ليست عليه.	Arabic **تحذير**

LEIA E COMPREENDA AS INSTRUÇÕES DO FABRICANTE PARA ESTE EQUIPAMENTO E AS PARTES DE USO, E SIGA AS PRÁTICAS DE SEGURANÇA DO EMPREGADOR.

使う機械や溶材のメーカーの指示書をよく読み、まず理解して下さい。そして貴社の安全規定に従って下さい。

請詳細閱讀並理解製造廠提供的説明以及應該使用的銀捍材料，並請遵守貴方的有関勞動保護規定。

이 제품에 동봉된 작업지침서를 숙지하시고 귀사의 작업자 안전수칙을 준수하시기 바랍니다.

اقرأ بتمعن وافهم تعليمات المصنع المنتج لهذه المعدات والمواد قبل استعمالها واتبع تعليمات الوقاية لصاحب العمل.

CUSTOMER ASSISTANCE POLICY

The business of The Lincoln Electric Company is manufacturing and selling high quality welding equipment, consumables, and cutting equipment. Our challenge is to meet the needs of our customers and to exceed their expectations. On occasion, purchasers may ask Lincoln Electric for advice or information about their use of our products. We respond to our customers based on the best information in our possession at that time. Lincoln Electric is not in a position to warrant or guarantee such advice, and assumes no liability, with respect to such information or advice. We expressly disclaim any warranty of any kind, including any warranty of fitness for any customer's particular purpose, with respect to such information or advice. As a matter of practical consideration, we also cannot assume any responsibility for updating or correcting any such information or advice once it has been given, nor does the provision of information or advice create, expand or alter any warranty with respect to the sale of our products.

Lincoln Electric is a responsive manufacturer, but the selection and use of specific products sold by Lincoln Electric is solely within the control of, and remains the sole responsibility of the customer. Many variables beyond the control of Lincoln Electric affect the results obtained in applying these types of fabrication methods and service requirements.

Subject to Change – This information is accurate to the best of our knowledge at the time of printing. Please refer to www.lincolnelectric.com for any updated information.

THE LINCOLN ELECTRIC COMPANY
22801 St. Clair Avenue • Cleveland, OH • 44117-1199 • U.S.A.
Phone: +1.216.481.8100 • www.lincolnelectric.com